# Product Data Sheet

## GW66005

IB Range

Industrial-type socket-outlets conforming to IEC 309 Standard, with mechanical interlock consisting of a circuit breaker enabling the plug to be connected and disconnected only in the open position, and the switch to close only with the plug inserted. Wide range including models with rotary switch and fuseholder base, AUTOMATIKA with 6kA C characteristic miniature circuit breaker, and version with safety transformer. High application versatility thanks to the possibility of assembly in back-mounting and flush-mounting boxes, and boards of the 68 Q-DIN and Q-MC ranges.

| | | | |
|---|---|---|---|
| Type | Horizontal | Thermo-pressure with ball | 125 °C (active parts) - 80 °C (passive parts) |
| IP degree | IP44 | No. of poles | 3P+E |
| Mechanical resistance | IK08 | Frequency | 50/60 Hz |
| Operating temperature | -25 +40 °C | Protection | NO (SBF) |
| With back-mounting box | Yes | Electrocod | 2220 |
| Glow wire test | 850 °C (active parts) - 650 °C (passive parts) | Colour | Blue |
| Rated current (A) | 16 | Reference h | 9 |
| Rated voltage | 200-250 V | | |

**BEHAVIOUR WITH CHEMICAL AND ATMOSPHERIC AGENTS**

| Saline solution | Acids | | Bases | | Solvents | | | | Mineral oil | UV rays |
|---|---|---|---|---|---|---|---|---|---|---|
| | Concentrated | Diluited | Concentrated | Diluited | Hexane | Benzol | Acetone | Alcohol | | |
| Resistant | Not resistant | Limited resistance | Limited resistance | Limited resistance | Limited resistance | Not resistant | Not resistant | Limited resistance | Limited resistance | Resistant |

## DIMENSIONAL

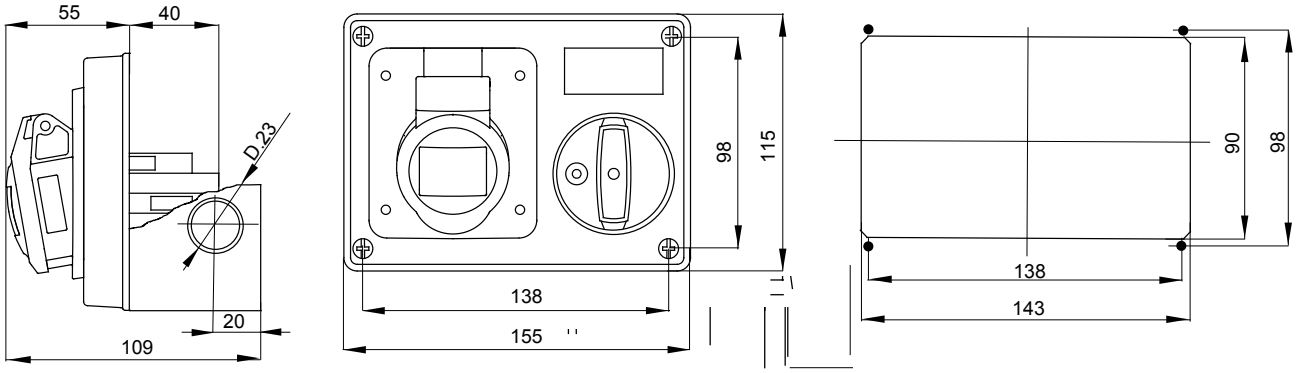


## TECHNICAL SYMBOLOGY

125 °C (active parts) - 80 °C (passive parts)

**IP** IP44

**IK** IK08

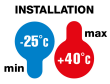


-25 +40 °C

**GWT** 850 °C (active parts) - 650 °C (passive parts)

## STANDARDS/APPROVALS

Reach Declaration

GEWISS S.p.A. Via Domenico Bosatelli 1
24069 Cenate Sotto - Bergamo - Italy
tel. +39 035 94 61 11 fax +39 035 94 69 09

www.gewiss.com
sat@gewiss.com
Last update 12/10/2024

Data, measures, designs and pictures are shown only as informative purposes, and could be changed without previous notice