Product Data Sheet

GW63262H

IEC 309 HP range

IEC 309 HP: range of plugs and socket-outlets compliant with international Standards IEC 60309-1 and IEC 60309-2, assimilated at European level as EN 60309-1 and EN 60309-2. This range expands the GEWISS assortment of mobile plugs, mobile and recessed sockets for currents from 16 to 125A with IP44 / IP54 protection ratings and ratings up to IP66 / IP67 / IP68 / IP69 to ensure total protection in all possible applications. The technopolymers and thickness used for the parts made of insulating material guarantee an elevated degree of mechanical and chemical agent resistance. All the sleeves and pins of the IEC 309 HP socket-outlets and plugs are surface-treated with nickel-plating to ensure full protection against corrosion, oxidation and abrasion. All the external metallic elements of the IEC 309 HP plugs and socket-outlets are made of stainless steel (the threaded metallic inserts for the body-grip coupling of the 63-125A versions are made of brass).

Colour	Green	Rated current (A)	63
IP degree	IP66/IP67	No. of poles	3P+N+E
Mechanical resistance	IK09	Reference h	10
Flange dimensions (mm)	110x100	Type	10° angled flush-mounting socket-outlet
Rated voltage	>50 V	Frequency	100 - 300 Hz
Terminal tightening capacity	6-16mm² flexible cables - 6-25mm² rigid cables	Operating temperature	-25 +55 °C
Type of wiring	Mantle terminal	Type of material	Halogen-free in compliance with EN 60754-2
Electrocod	2211	Glow wire test	850 °C (active parts) - 650 °C (passive parts)
Total number of operations	> 2000	Breaking capacity at 1.1 Un	79 A
Insulation resistance	> 10 MΩ	Thermo-pressure with ball	125 °C (active parts) - 80 °C (passive parts)

BEHAVIOUR WITH CHEMICAL AND ATMOSPHERIC AGENTS

Saline solution	Acids		Bases		Solvents				Mineral oil	UV rays
	Concentrated	Diluited	Concentrated	Diluited	Hexane	Benzol	Acetone	Alcohol		
Resistant	Not resistant	Limited resistance	Limited resistance	Resistant	Resistant	Resistant	Resistant	Resistente	Resistant	Resistant

DIMENSIONAL

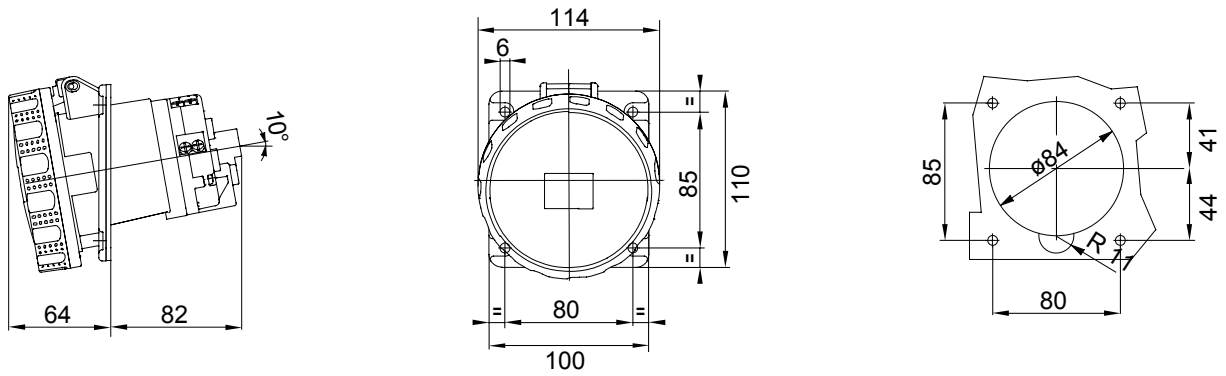

TECHNICAL SYMBOLOGY

IP66/IP67 | IK09 | -25 +55 °C | Mantle terminal | Halogen-free in compliance with EN 60754-2 | 850 °C (active parts) - 650 °C (passive parts) | 125 °C (active parts) - 80 °C (passive parts)

STANDARDS/APPROVALS

Reach Declaration

GEWISS S.p.A. Via Domenico Bosatelli 1
24069 Cenate Sotto - Bergamo - Italy
tel. +39 035 94 61 11 fax +39 035 94 69 09

www.gewiss.com
sat@gewiss.com
Last update 12/10/2024

Data, measures, designs and pictures are shown only as informative purposes, and could be changed without previous notice