# Product Data Sheet

## GW62977H

IEC 309 HP range

IEC 309 HP: range of plugs and socket-outlets compliant with international Standards IEC 60309-1 and IEC 60309-2, assimilated at European level as EN 60309-1 and EN 60309-2. This range expands the GEWISS assortment of mobile plugs, mobile and recessed sockets for currents from 16 to 125A with IP44 / IP54 protection ratings and ratings up to IP66 / IP67 / IP68 / IP69 to ensure total protection in all possible applications. The technopolymers and thickness used for the parts made of insulating material guarantee an elevated degree of mechanical and chemical agent resistance. All the sleeves and pins of the IEC 309 HP socket-outlets and plugs are surface-treated with nickel-plating to ensure full protection against corrosion, oxidation and abrasion. All the external metallic elements of the IEC 309 HP plugs and socket-outlets are made of stainless steel (the threaded metallic inserts for the body-grip coupling of the 63-125A versions are made of brass).

| | | | |
|---|---|---|---|
| Colour | Red | Rated current (A) | 125 |
| IP degree | IP66/IP67 | No. of poles | 3P+E |
| Mechanical resistance | IK09 | Reference h | 11 |
| Flange dimensions (mm) | 114x114 | Type | 10° angled flush-mounting socket-outlet |
| Rated voltage | 440 - 460 V | Frequency | 60 Hz |
| Terminal tightening capacity | 16-50mm² flexible cables - 25-70mm² rigid cables | Operating temperature | -25 +55 °C |
| Type of wiring | Mantle terminal | Type of material | Halogen-free in compliance with EN 60754-2 |
| Electrocod | 2211 | Glow wire test | 850 °C (active parts) - 650 °C (passive parts) |
| Total number of operations | > 500 | Breaking capacity at 1.1 Un | 156 A |
| Insulation resistance | > 10 MΩ | Thermo-pressure with ball | 125 °C (active parts) - 80 °C (passive parts) |

**BEHAVIOUR WITH CHEMICAL AND ATMOSPHERIC AGENTS**

| Saline solution | Acids | | Bases | | Solvents | | | | Mineral oil | UV rays |
|---|---|---|---|---|---|---|---|---|---|---|
| | Concentrated | Diluted | Concentrated | Diluted | Hexane | Benzol | Acetone | Alcohol | | |
| Resistant | Not resistant | Limited resistance | Limited resistance | Resistant | Resistant | Resistant | Resistant | Resistente | Resistant | Resistant |

## DIMENSIONAL

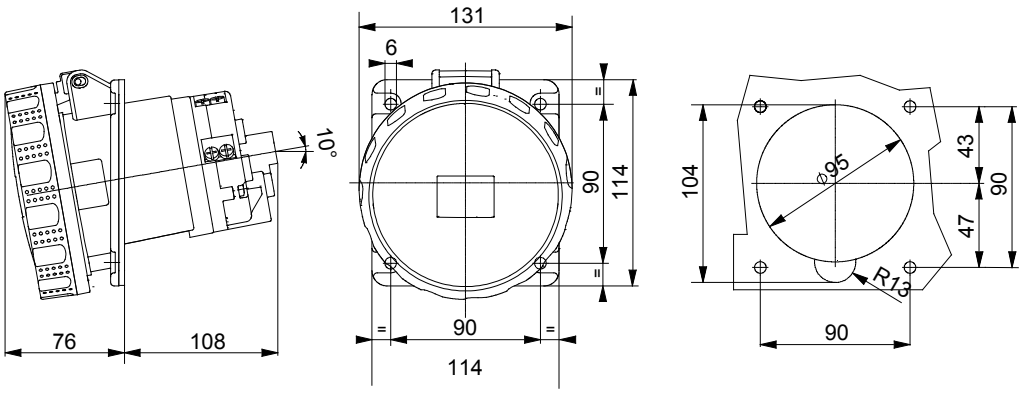


## TECHNICAL SYMBOLOGY

IP66/IP67 | IK09 | -25 +55 °C | Mantle terminal | Halogen-free in compliance with EN 60754-2 | 850 °C (active parts) - 650 °C (passive parts) | 125 °C (active parts) - 80 °C (passive parts)

## STANDARDS/APPROVALS

03

GEWISS S.p.A. Via Domenico Bosatelli 1
24069 Cenate Sotto - Bergamo - Italy
tel. +39 035 94 61 11 fax +39 035 94 69 09

www.gewiss.com
sat@gewiss.com
Last update 12/10/2024

Data, measures, designs and pictures are shown only as informative purposes, and could be changed without previous notice