Product Data Sheet

GW62483

IEC 309 HP range

A range of trailing and fixed plugs and socket-outlets for industrial use, complying with the dimensional and performance standards unified at International level (IEC 60309) and assimilated by the European Standards (EN 60309) and Italian Standards (CEI 23-12). Socket-outlets and plugs with a rated current of 63 and 125A are equipped with an extra pilot contact (CP) for creating an electric interlock. The range is completed with 90° fixed plugs and 10° and 90° fixed socket-outlets. Sleeves and pins are obtained from solid brass bar, type Pt. CuZn40Pb2 (Cu 58%, Zn 40%, Pb 2%); anti-loosening terminals with unlosable screws, and built-in cable clamp with anti-abrasion cable gland.

Colour	Black	Rated current (A)	16
IP degree	IP44	No. of poles	3P+E
Mechanical resistance	IK08	Reference h	7
Rated voltage	480-500 V	Type	90° angled surface-mounting socket-outlet
Frequency	50/60 Hz	Terminal tightening capacity	1-2.5mm² flexible cables - 1.5-4mm² rigid cables
Operating temperature	-25 +55 °C	Type of wiring	With screw
Electrocod	2210	Glow wire test	850 °C (active parts) - 650 °C (passive parts)
Total number of operations	> 5000	Permissible overload	22 A
Breaking capacity at 1.1 Un	20 A	Insulation resistance	> 10 MΩ
Thermo-pressure with ball	125 °C (active parts) - 80 °C (passive parts)		

BEHAVIOUR WITH CHEMICAL AND ATMOSPHERIC AGENTS

Saline solution	Acids		Bases		Solvents				Mineral oil	UV rays
	Concentrated	Diluited	Concentrated	Diluited	Hexane	Benzol	Acetone	Alcohol		
Resistant	Not resistant	Limited resistance	Limited resistance	Resistant	Resistant	Resistant	Resistant	Resistente	Resistant	Resistant

DIMENSIONAL

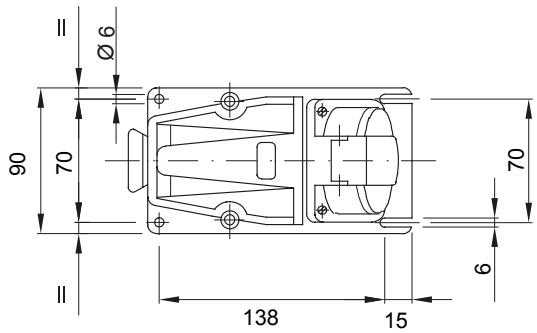

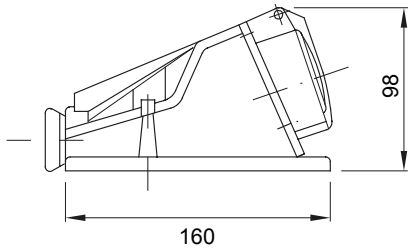

TECHNICAL SYMBOLOGY

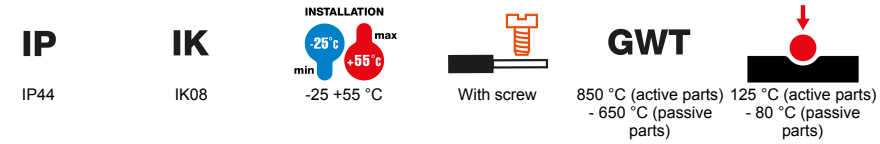

IP44 | IK08 | -25 +55 °C | With screw | 850 °C (active parts) - 650 °C (passive parts) | 125 °C (active parts) - 80 °C (passive parts)

STANDARDS/APPROVALS

GEWISS S.p.A. Via Domenico Bosatelli 1
24069 Cenate Sotto - Bergamo - Italy
tel. +39 035 94 61 11 fax +39 035 94 69 09

www.gewiss.com
sat@gewiss.com
Last update 12/10/2024

Data, measures, designs and pictures are shown only as informative purposes, and could be changed without previous notice