Product Data Sheet

GWD9418

MSX

Description	Interruttore automatico scatolato
Code	MSXE 1250
No. of poles	4P
Rated current	1250 A
Release	Electronic

ELECTRICAL CHARACTERISTICS	-	**MECHANICAL CHARACTERISTICS**	-
Standard	IEC/EN 60947-2	Execution	Fixed
Use category	B	DIN rail mounting	No
Rated frequency (Hz)	50 / 60	Can be equipped with motor operator	Yes
Rated operating voltage (Ue)	690 Vac	Compatible interlock	-
Rated impulse withstand voltage (Uimp)	8 kV	Terminals supplied	Rear RC
Overvoltage category	IV	Assembly position	Any
Insulation voltage (Ui)	800 V	Upline/downline power supply	Yes
Thermal regulation	0,4 - 0,5 - 0,63 - 0,8 - 0,9 - 0,95 - 1 x In	Electrical life (415Vac)	4.000 cycles
Magnetic regulation	Electronic LSIG	Mechanical life	5.000 cycles
Neutral protection	50% - 100% x Ir	Operating temperature	-5°C +65°C
Total power loss	281.24 W	Stocking temperature	-20° +65°
Rated short-circuit current making capacity (Icm)	-	Weight (kg)	25
Rated short-time withstand current for 0,3s (Icw)	15 kA	Width	280 mm
Idn regulation	-	Height	370 mm
DT regulation	-	Depth	120 mm
SERVICE BREAKING CAPACITY (ICU)	-	**RATED BREAKING CAPACITIY (ICS)**	-
220/240Vac	85 kA	220/240Vac	65 kA
400/415Vac	50 kA	400/415Vac	38 kA
440Vac	45 kA	440Vac	34 kA
525Vac	30 kA	525Vac	23 kA
690Vac	20 kA	690Vac	15 kA
250Vdc	-	250Vdc	-

DIMENSIONAL

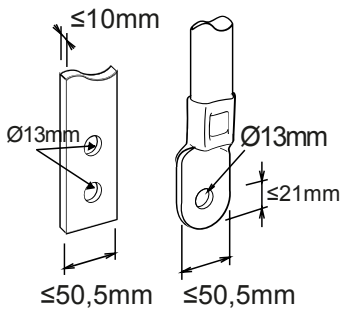

GEWISS S.p.A. Via Domenico Bosatelli 1
24069 Cenate Sotto - Bergamo - Italy
tel. +39 035 94 61 11 fax +39 035 94 69 09

www.gewiss.com
sat@gewiss.com
Last update 12/10/2024

Data, measures, designs and pictures are shown only as informative purposes, and could be changed without previous notice

STANDARDS/APPROVALS

CE