Product Data Sheet

GWD9308

MSX Range

Description	Interruttore automatico scatolato
Code	MSXE 250
No. of poles	3P
Rated current	250 A
Release	Electronic

ELECTRICAL CHARACTERISTICS	-	**MECHANICAL CHARACTERISTICS**	-
Standard	IEC/EN 60947-2	Execution	Fisso - Rimovibile
Use category	A	DIN rail mounting	No
Rated frequency (Hz)	50 / 60	Accessoriabile con comando motore	Sì
Rated operating voltage (Ue)	690 Vac	Compatible interlock	Lever – Cable
Rated impulse withstand voltage (Uimp)	8 kV	Terminals supplied	Front FC
Overvoltage category	IV	Assembly position	Any
Insulation voltage (Ui)	800 V	Upline/downline power supply	Sì
Thermal regulation	0,4 - 0,5 - 0,63 - 0,8 - 0,9 - 0,95 - 1 x In	Electrical life (415Vac)	10.000 cycles
Magnetic regulation	Electronic LSI	Mechanical life	30.000 cycles
Neutral protection	-	Operating temperature	-5°C +65°C
Total power loss	65.7 W	Stocking temperature	-20° +65°
Rated short-circuit current making capacity (Icm)	-	Weight (kg)	2.3
Rated short-time withstand current for 0,3s (Icw)	-	Width	105 mm
Idn regulation	-	Height	165 mm
DT regulation	-	Depth	103 mm
SERVICE BREAKING CAPACITY (ICU)	-	**RATED BREAKING CAPACITIY (ICS)**	-
220/240Vac	65 kA	220/240Vac	65 kA
400/415Vac	36 kA	400/415Vac	36 kA
440Vac	25 kA	440Vac	25 kA
525Vac	25 kA	525Vac	25 kA
690Vac	7,5 kA	690Vac	7,5 kA
250Vdc	-	250Vdc	-

DIMENSIONAL

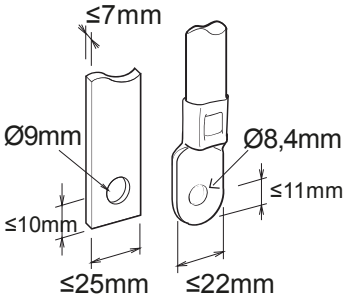

GEWISS S.p.A. Via Domenico Bosatelli 1
24069 Cenate Sotto - Bergamo - Italy
tel. +39 035 94 61 11 fax +39 035 94 69 09

www.gewiss.com
sat@gewiss.com
Last update 28/04/2024

Data, measures, designs and pictures are shown only as informative purposes, and could be changed without previous notice

STANDARDS/APPROVALS

CE