Product Data Sheet

GW95733

While stocks last Power

Description	RESIDUAL CURRENT CIRCUIT BREAKER
Code	SD
No. of poles	4P
No. modules	4
Rated current	80 A
Rated residual operating current	300 mA
Type	B[IR]
Rated voltage (EN/IEC 61008-1, 61008-2-1, 62423)	400/415 V

Standard	IEC/EN 61008-1, IEC/EN 61008-2-1, IEC/EN 62423	Rated frequency (Hz)	50/60 Hz
Insulation voltage (Ui)	500 V	Rated impulse withstand voltage (Uimp)	4 kV
Overvoltage category	III	Level of immunity (8/20 µs)	3000 A
Section rigid cable	<25	Section flexible cable	<25
Rated tightening torque	2.5 Nm	Double connection	YES (only down stream)
Operating temperature	-25 ÷ +45°C	Stocking temperature	-40°C ÷ +70°C
Electrical endurance	≥ 10.000	Mechanical endurance	≥ 10.000
Auxiliaries compatibility	Yes	ReStart compatibility	No
Assembly position	Any		

DIMENSIONAL

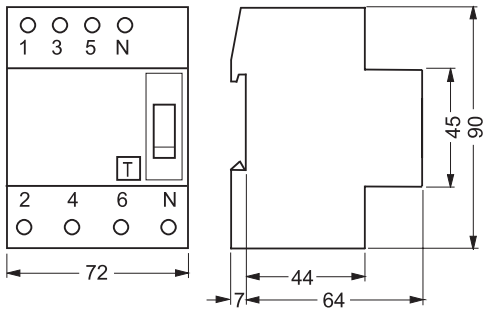

WIRING DIAGRAM

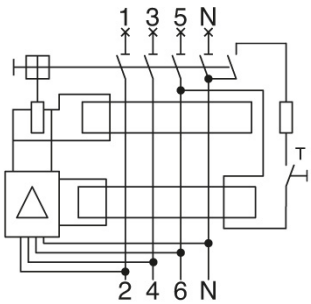

4P - 4 MODULES

STANDARDS/APPROVALS

CE

GEWISS S.p.A. Via Domenico Bosatelli 1
24069 Cenate Sotto - Bergamo - Italy
tel. +39 035 94 61 11 fax +39 035 94 69 09

www.gewiss.com
sat@gewiss.com
Last update 12/10/2024

Data, measures, designs and pictures are shown only as informative purposes, and could be changed without previous notice