Product Data Sheet

GW95126

90 RCD Range

Description	RCCB WITH OVERCURRENT PROTECTION
Code	MDC 60
No. of poles	2P
No. modules	2
Rated current	10 A
Rated residual operating current	30 mA
Type	A
Curve	B
Rated voltage (IEC/EN 61009-1, 61009-2-1)	230/240 V
Energy limiting class	3

Standard	IEC/EN 61009-1, IEC/EN 61009-2-1	Rated frequency (Hz)	50/60 Hz
Breaking capacity IEC/EN 61009-1 230V (Icn)	6000 A	Breaking capacity IEC/EN 61009-1 (Ics)	1 x Icn
Breaking capacity IEC/EN 60947-2 230V (Icu)	10 kA	Breaking capacity IEC/EN 60947-2 (Ics)	75% Icu
Insulation voltage (Ui)	500 V	Level of immunity (8/20 µs)	250 A
Rated impulse withstand voltage (Uimp)	4 kV	Overvoltage category	III
Electrical endurance	10.000	Mechanical endurance	20.000
Section rigid cable	<=1x35 - <=2x16 - <=1x16+2x10 mm²	Section flexible cable	<=1x35 - <=2x16 - <=1x16+2x10 mm²
Double connection	YES (only down stream)	Rated tightening torque	2 Nm
Operating temperature	-25 +60° C (derating of In with T>30° C)	Stocking temperature	-40 +70 °C
Auxiliaries compatibility	Yes	ReStart compatibility	Yes
Assembly position	Any		

DIMENSIONAL

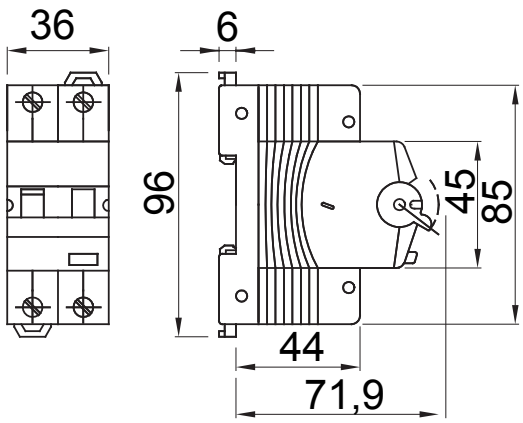

WIRING DIAGRAM

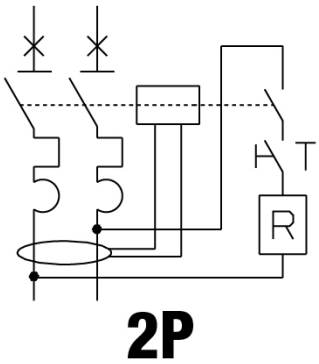

STANDARDS/APPROVALS

GEWISS S.p.A. Via Domenico Bosatelli 1
24069 Cenate Sotto - Bergamo - Italy
tel. +39 035 94 61 11 fax +39 035 94 69 09

www.gewiss.com
sat@gewiss.com
Last update 01/05/2024

Data, measures, designs and pictures are shown only as informative purposes, and could be changed without previous notice