# Product Data Sheet

## GW13248

CHORUSMART - domestic range

Wide range of control devices, sockets for power supply (conforming to national and international standards) signal pick-up, climate control, comfort management, technical alarm signalling and emergency lighting management. The ChoruSmart modular devices are available in five colours, glossy white, satin white, natural beige, satin black and lacquered titanium and in various sizes from 1/2, 1, 2 and 3 modules. Thanks to the mounting supports for rectangular, square and round boxes, endless combinations can be created with the ChoruSmart range of plates.

| | | | |
|---|---|---|---|
| Category | Socket-outlet | Description | 2P+E - 16A |
| Colour | Natural satin beige | Voltage | 250 V ac |
| Standard | French | Characteristics | With safety shields |
| For plug pins | Ø 4 / 4.8 mm | Wiring terminals | Screws with front tightening terminals |
| Standard | IEC 60884-1; NF C 61-314 | Resistance at test voltage | 2000 V at 50 Hz for 1 minute |
| Insulation resistance | > 5 MOhm | Prolonged operation socket (no.of position changes) | 10.000 at In 250 V ac cosφ=0,8 |
| Thermo-pressure with ball | 125 °C | Glow Wire Test | 850 °C |
| Terminal grip on cable traction | > 50 N | Terminal tightening capacity stranded cables (mm²) | min. 0,75 - max. 2x4 |
| Terminal tightening capacity solid cables (mm²) | min. 0,5 - max. 2x2,5 | No. modules | 2 |
| Electrocod | 0131 | Material | Technopolymer |

## DIMENSIONAL

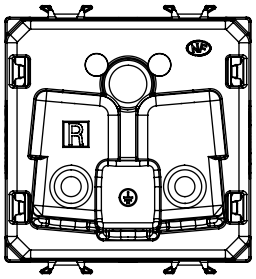

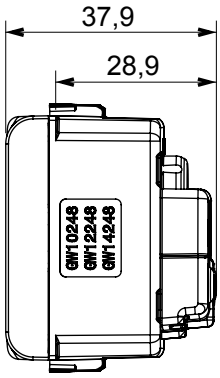


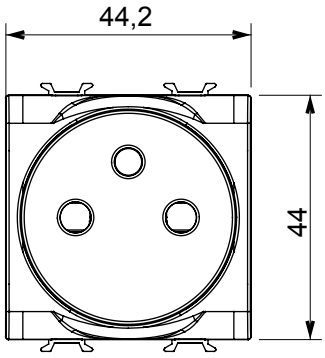


## TECHNICAL SYMBOLOGY

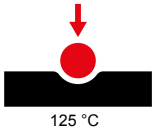


## STANDARDS/APPROVALS

GEWISS S.p.A. Via Domenico Bosatelli 1
24069 Cenate Sotto - Bergamo - Italy
tel. +39 035 94 61 11 fax +39 035 94 69 09

www.gewiss.com
sat@gewiss.com
Last update 12/10/2024

Data, measures, designs and pictures are shown only as informative purposes, and could be changed without previous notice