Product Data Sheet

GW13209

CHORUSMART - domestic range

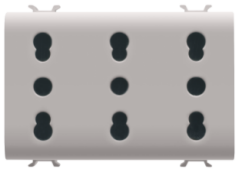

Wide range of control devices, sockets for power supply (conforming to national and international standards) signal pick-up, climate control, comfort management, technical alarm signalling and emergency lighting management. The ChoruSmart modular devices are available in five colours, glossy white, satin white, natural beige, satin black and lacquered titanium and in various sizes from 1/2, 1, 2 and 3 modules. Thanks to the mounting supports for rectangular, square and round boxes, endless combinations can be created with the ChoruSmart range of plates.

Category	Triple socket-outlet	Description	3x2P+E - 16A Dual amperage
Colour	Natural satin beige	Voltage	250 V ac
Standard	English	Characteristics	With safety shields
For plug pins	Ø 4 / 5 mm	Wiring terminals	With screw
Socket-out type	P11-P17	Standard	CEI 23-50
Resistance at test voltage	2000 V at 50 Hz for 1 minute	Insulation resistance	> 5 MOhm
Prolonged operation socket (no.of position changes)	10.000 at In 250 V ac cosφ=0,8	Thermo-pressure with ball	125 °C
Glow Wire Test	850 °C	Terminal grip on cable traction	> 50 N
Terminal tightening capacity stranded cables (mm²)	min. 0,75 - max. 2x4	Terminal tightening capacity solid cables (mm²)	min. 0,5 - max. 2x2,5
No. modules	3	Electrocod	0131
Material	Technopolymer		

DIMENSIONAL

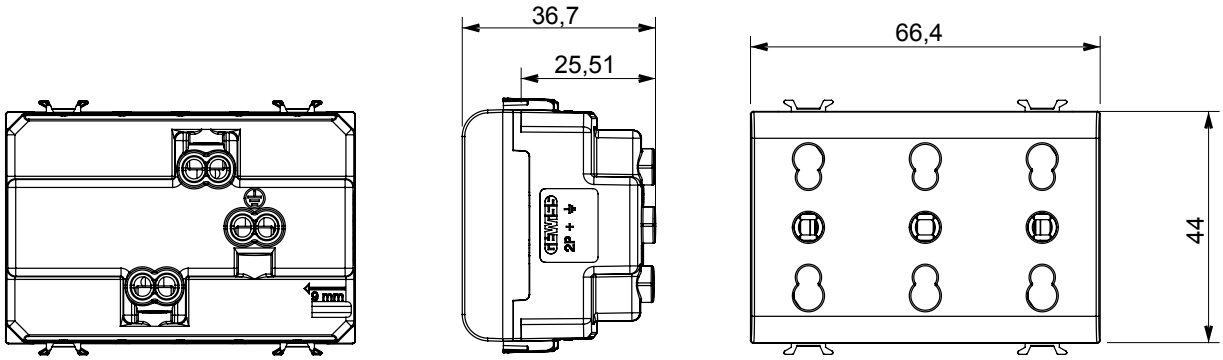

TECHNICAL SYMBOLOGY

GWT

125 °C 850 °C

STANDARDS/APPROVALS

GEWISS S.p.A. Via Domenico Bosatelli 1
24069 Cenate Sotto - Bergamo - Italy
tel. +39 035 94 61 11 fax +39 035 94 69 09

www.gewiss.com
sat@gewiss.com
Last update 12/10/2024

Data, measures, designs and pictures are shown only as informative purposes, and could be changed without previous notice