Product Data Sheet

GW15032

CHORUSMART - Domestic range

Wide range of control devices, sockets for power supply (conforming to national and international standards) signal pick-up, climate control, comfort management, technical alarm signalling and emergency lighting management. The ChoruSmart modular devices are available in five colours, glossy white, satin white, natural beige, satin black and lacquered titanium and in various sizes from 1/2, 1, 2 and 3 modules. Thanks to the mounting supports for rectangular, square and round boxes, endless combinations can be created with the ChoruSmart range of plates.

Category	One-way switch	Button key	With diffuser
Colour	Satin White	Description	1P - 16AX illuminable
Voltage	250 V ac	Standard	EN 60669-1
Resistance at test voltage	2000 V at 50 Hz for 1 minute	Rated power of 230V LED lamps	200 W
Insulation resistance	> 5 MOhm	Wiring terminals	With screw
Prolonged operation switch (no.of position changes)	40.000 at In 250 V ac cosφ=0,6	Thermo-pressure with ball	125 °C
Glow Wire Test	850 °C	Terminal grip on cable traction	> 50 N
Terminal tightening capacity stranded cables (mm²)	min. 0,75 - max. 2x4	Terminal tightening capacity solid cables (mm²)	min. 0,5 - max. 2x2,5
No. modules	2	Material	Technopolymer
Electrocod	0130		

DIMENSIONAL

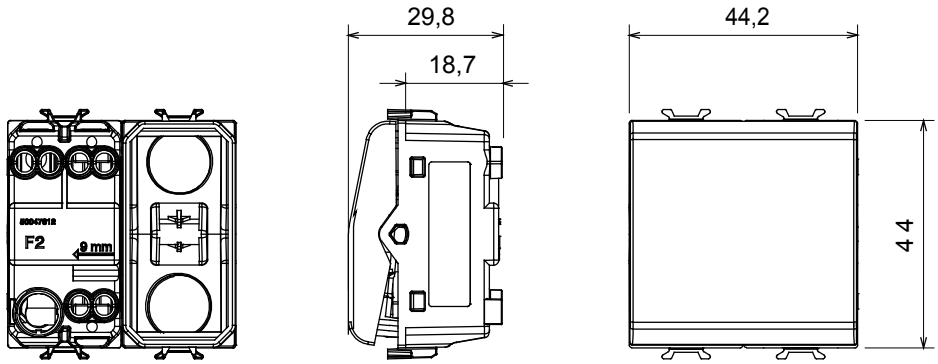

TECHNICAL SYMBOLOGY

STANDARDS/APPROVALS

GEWISS S.p.A. Via Domenico Bosatelli 1
24069 Cenate Sotto - Bergamo - Italy
tel. +39 035 94 61 11 fax +39 035 94 69 09

www.gewiss.com
sat@gewiss.com
Last update 12/10/2024

Data, measures, designs and pictures are shown only as informative purposes, and could be changed without previous notice