Product Data Sheet

GW35202Y

DAHLIA - Domestic range

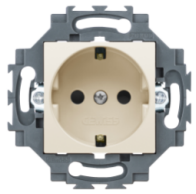

Residential series suitable for installations on round and square boxes, characterised by an elegant appearance and classic shapes. The plates, made of technopolymer in seven colours and with different modularities, from 1 to 5-gang, can be installed in both horizontal and vertical positions. The series, developed around a core of monobloc devices, is available in two colours: white and ivory, both with a glossy finish. Expandable with ChorusSmart modular devices.

Category	Socket-outlet	Standard	German standard
Colour	Ivory	Material	Technopolymer
Finishing	Glossy	Description	2P+E - 16A
Voltage	250 V ac	For plug pins	Ø 4.8 mm
Characteristics	With safety shields	Type of terminals	With screw
Fixing	With clutches/Screws	Glow wire test	850 °C
Thermo-pressure with ball	125 °C	Resistance at test voltage	2000 V at 50 Hz for 1 minute
Insulation resistance	> 5 MOhm	Prolonged operation socket (no.of position changes)	10.000 at In 250 V ac cosφ=0,8
Terminal grip on cable traction	> 50 N	Terminal tightening capacity	0,5-2x2,5 mm² rigid cables - 0,75-2x4 mm² flexible cables
Standard	IEC 60884-1		

DIMENSIONAL

).78

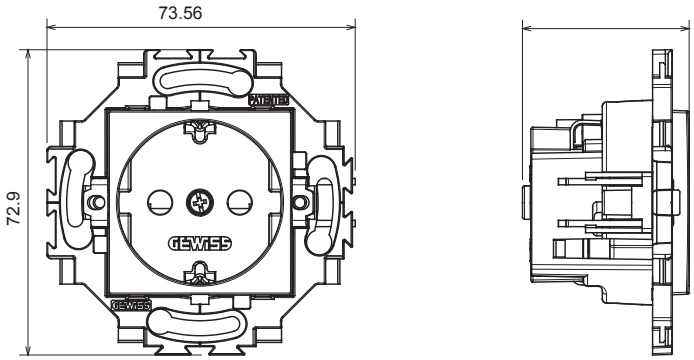

TECHNICAL SYMBOLOGY

STANDARDS/APPROVALS

GEWISS S.p.A. Via Domenico Bosatelli 1
24069 Cenate Sotto - Bergamo - Italy
tel. +39 035 94 61 11 fax +39 035 94 69 09

www.gewiss.com
sat@gewiss.com
Last update 18/04/2024

Data, measures, designs and pictures are shown only as informative purposes, and could be changed without previous notice