Product Data Sheet

GW35006W

DAHLIA - Domestic range

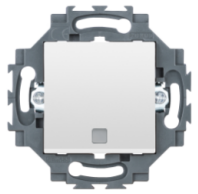

Residential series suitable for installations on round and square boxes, characterised by an elegant appearance and classic shapes. The plates, made of technopolymer in seven colours and with different modularities, from 1 to 5-gang, can be installed in both horizontal and vertical positions. The series, developed around a core of monobloc devices, is available in two colours: white and ivory, both with a glossy finish. Expandable with ChorusSmart modular devices.

Category	One-way switch	Button key	With replaceable neutral lens
Colour	White	Material	Technopolymer
Finishing	Glossy	Description	1P - 10 AX backlit
Voltage	250 V ac	Type of terminals	Screwless
Fixing	With clutches/Screws	Rated power of 230V LED lamps	100 W
Glow wire test	850 °C	Thermo-pressure with ball	125 °C
Resistance at test voltage	2000 V at 50 Hz for 1 minute	Insulation resistance	> 5 MOhm
Prolonged operation switch (no.of position changes)	40.000 at In 250 V ac cosφ=0,6	Terminal grip on cable traction	30 N
Terminal tightening capacity	0,5-2x2,5 mm² rigid cables	Standard	EN 60669-1; 2014/35/EU

DIMENSIONAL

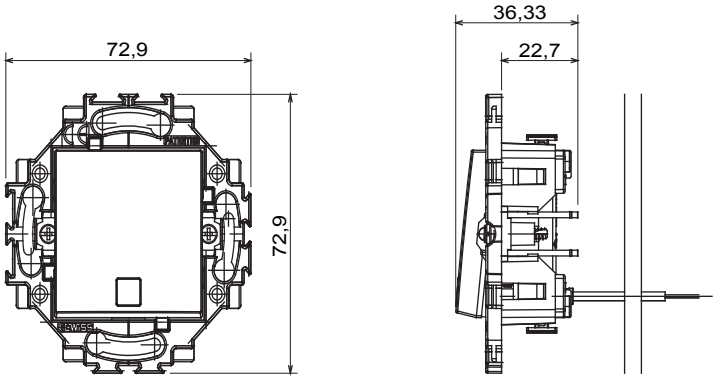

TECHNICAL SYMBOLOGY

STANDARDS/APPROVALS

GEWISS S.p.A. Via Domenico Bosatelli 1
24069 Cenate Sotto - Bergamo - Italy
tel. +39 035 94 61 11 fax +39 035 94 69 09

www.gewiss.com
sat@gewiss.com
Last update 28/04/2024

Data, measures, designs and pictures are shown only as informative purposes, and could be changed without previous notice