Product Data Sheet

GW22453

27 COMBI Range

Watertight plates IP55 System range for rectangular (3 and 4 modules) flush mounting boxes. Watertight plates self-supporting for the installation of System range devices. Ergonomic membrane, opening facilitated by a comfortable handle. IP55 degree guaranteed with closed lid and watertight plate mounted on smooth and waterproof walls, without grooves.

Category	System series	Type	Italian standard plates
Group	Watertight plates	Description	3 modules
Colour Plate	Grey RAL 7035	Finishing	Glossy
Material	Technopolymer	IP degree	IP55 (with closed lid)
Lid	With membrane	Membrane color	Transparent
For flush mounting box	Rectangular 3 modules	Fixing	2 screws (included)
Type of screw	6/32 x 18mm	Screw material	Galvanised steel
Included support	Self-supporting	Gasket	Vulcanized expanded rubber
Glow Wire Test	650 °C	Thermo-pressure with ball	70 °C
Standard	EN 60669-1	Operating temperature	-25 +60 °C
UV resistance	Yes (ISO 4892-2)	Maximum opening angle lid	100°
Electrocod	0110		

BEHAVIOUR WITH CHEMICAL AND ATMOSPHERIC AGENTS

Saline solution	Acids		Bases		Solvents				Mineral oil	UV rays
	Concentrated	Diluited	Concentrated	Diluited	Hexane	Benzol	Acetone	Alcohol		
Resistant	Limited resistance	Resistant	Resistant	Resistant	Limited resistance	Not resistant	Not resistant	Not resistant	Limited resistance	Resistant

DIMENSIONAL

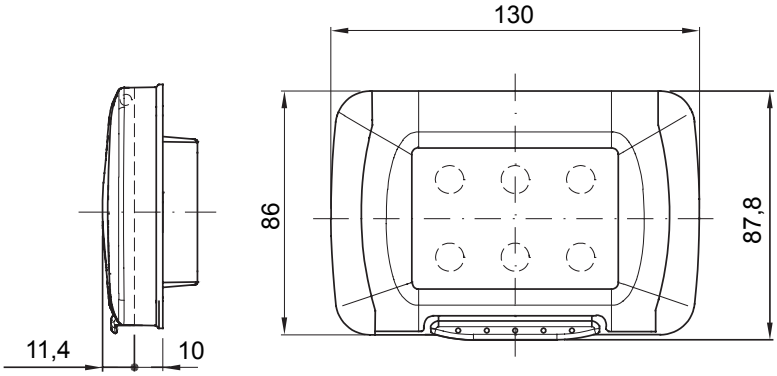

TECHNICAL SYMBOLOGY

IP	GWT		
IP55 (with closed lid)	650 °C	70 °C	-25 +60 °C

STANDARDS/APPROVALS

GEWISS S.p.A. Via Domenico Bosatelli 1
24069 Cenate Sotto - Bergamo - Italy
tel. +39 035 94 61 11 fax +39 035 94 69 09

www.gewiss.com
sat@gewiss.com
Last update 12/10/2024

Data, measures, designs and pictures are shown only as informative purposes, and could be changed without previous notice