Product Data Sheet

GW20298

SYSTEM WHITE - Domestic range

The System modular devices make it possible to create infinite combination between devices and plates, thanks to a complete range that is able to satisfy all design, functional and installation requirements.
The range includes commands, socket- outlets, protection, indicators, connectors and devices for the control, safety and comfort of your home.

Category	Socket-Outlet	Description	2P+E - 16A
Group	for dedicated lines	Colour	Red
Voltage	250 V ac	Earth pit	-
Standard	Israeli	Characteristics	With safety shields
For plug pins	Round Ø 4 / 4.4 mm	Wiring terminals	With screw
Type	-	Standard	IEC 60884-1 / SI 32 part 1.1
Resistance at test voltage	2000 V at 50 Hz for 1 minute	Insulation resistance	> 5 MOhm
Prolonged operation switch (no.of position changes)	10.000 at In 250 V ac cosφ=0,8	Thermo-pressure with ball	125 °C
Glow Wire Test	850 °C	Terminal grip on cable traction	> 50 N
Terminal tightening capacity stranded cables (mm²)	min. 0,75 - max. 2x4	Terminal tightening capacity solid cables (mm²)	min. 0,5 - max. 2x2,5
No. SYSTEM modules	2	Material	Technopolymer
Electrocod	0131		

DIMENSIONAL

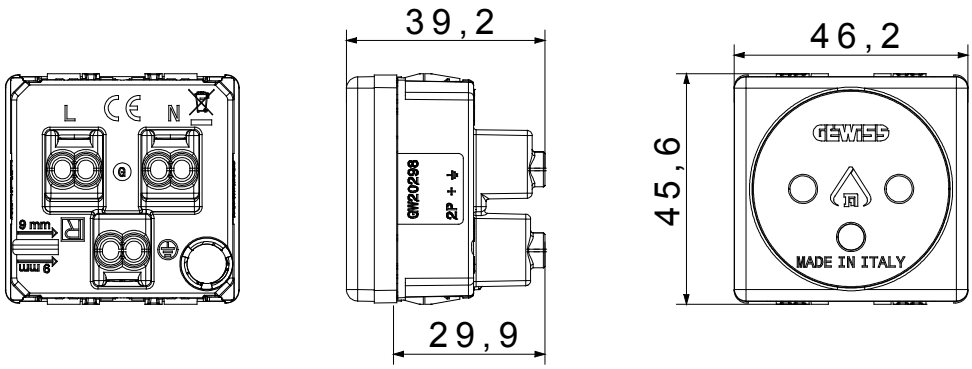

TECHNICAL SYMBOLOGY

GWT

125 °C 850 °C

STANDARDS/APPROVALS

CE

GEWISS S.p.A. Via Domenico Bosatelli 1
24069 Cenate Sotto - Bergamo - Italy
tel. +39 035 94 61 11 fax +39 035 94 69 09

www.gewiss.com
sat@gewiss.com
Last update 27/04/2024

Data, measures, designs and pictures are shown only as informative purposes, and could be changed without previous notice