Product Data Sheet

GW20229

SYSTEM WHITE - Domestic range

The System modular devices allow the creation of infinite combinations of devices and plates, through a complete range that covers all design, functional and installation needs. Colours and finishes: glossy white, elegant and classy. The range includes control units, socket-outlets, breakers, indicators, connectors and devices for the control, safety and comfort of your home.
Item designated solely for export to a limited number of countries outside of the European Union or where European Directives are not applied.

Category	TV socket-outlet	Description	Branched
Type	-	Colour	White
Attenuation	20 dB	Frequency	40-860 MHz
Shielding	-	For connector type	IEC Female Ø 9,5 mm
Standard	-	No. SYSTEM modules	1
Cable fixing	With screw	Case	-
Material	Technopolymer	Electrocod	0131

DIMENSIONAL

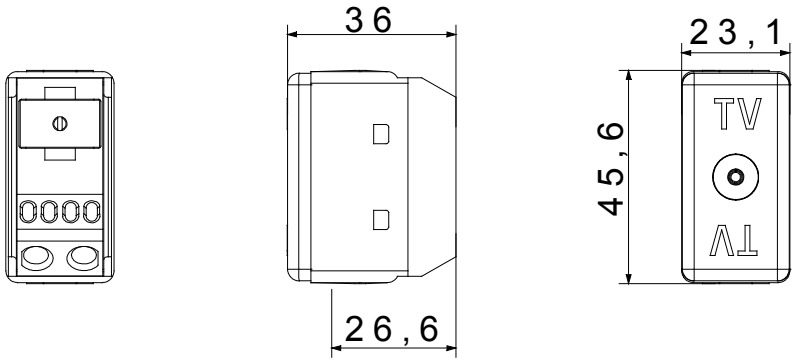

STANDARDS/APPROVALS

Reach Declaration

GEWISS S.p.A. Via Domenico Bosatelli 1
24069 Cenate Sotto - Bergamo - Italy
tel. +39 035 94 61 11 fax +39 035 94 69 09

www.gewiss.com
sat@gewiss.com
Last update 12/10/2024

Data, measures, designs and pictures are shown only as informative purposes, and could be changed without previous notice