# Product Data Sheet

## GW10007

CHORUSMART - Domestic range

Wide range of control devices, sockets for power supply (conforming to national and international standards) signal pick-up, climate control, comfort management, technical alarm signalling and emergency lighting management. The ChoruSmart modular devices are available in five colours, glossy white, satin white, natural beige, satin black and lacquered titanium and in various sizes from 1/2, 1, 2 and 3 modules. Thanks to the mounting supports for rectangular, square and round boxes, endless combinations can be created with the ChoruSmart range of plates.

| | | | |
|---|---|---|---|
| Category | One-way switch | Type of use | Heavy duty |
| Colour | Glossy white | Description | 2P - 25 AX |
| Voltage | 250 V ac | Standard | EN 60669-1 |
| Resistance at test voltage | 2000 V at 50 Hz for 1 minute | Rated power of 230V LED lamps | 250 W |
| Insulation resistance | > 5 MOhm | Wiring terminals | With screw |
| Prolonged operation switch (no.of position changes) | 40.000 at In 250 V ac cosφ=0,6 | Thermo-pressure with ball | 125 °C |
| Glow Wire Test | 850 °C | Terminal grip on cable traction | > 50 N |
| Terminal tightening capacity stranded cables (mm²) | min. 0,75 - max. 2x4 | Terminal tightening capacity solid cables (mm²) | min. 0,5 - max. 2x2,5 |
| No. modules | 1 | Button key | Neutral |
| Symbol | 0/1 | Material | Technopolymer |
| Electrocod | 0130 | | |

## DIMENSIONAL

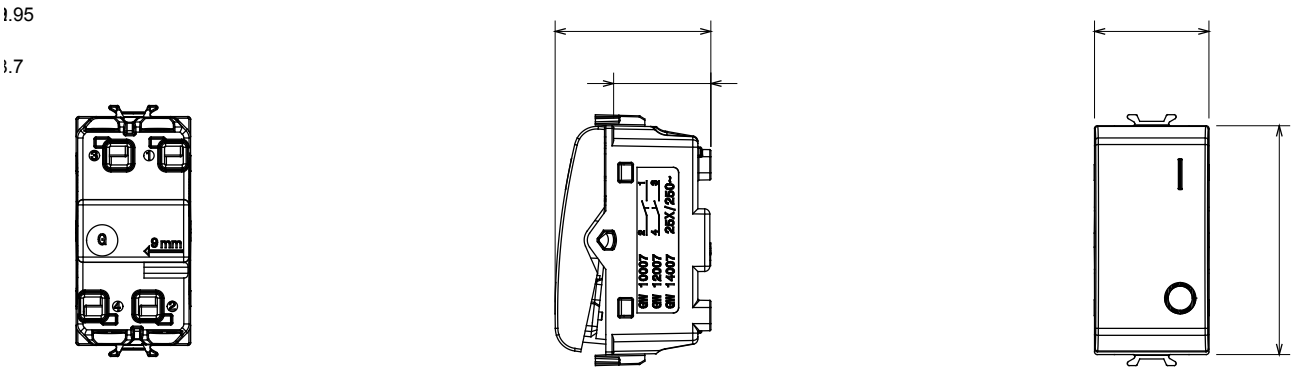


## TECHNICAL SYMBOLOGY

## STANDARDS/APPROVALS

GEWISS S.p.A. Via Domenico Bosatelli 1
24069 Cenate Sotto - Bergamo - Italy
tel. +39 035 94 61 11 fax +39 035 94 69 09

www.gewiss.com
sat@gewiss.com
Last update 12/10/2024

Data, measures, designs and pictures are shown only as informative purposes, and could be changed without previous notice