Product Data Sheet

GW38374

DATA CENTER range

Complete system for the connection and distribution of LAN networks in residential and tertiary sector environments.
The range includes fibre optic solutions, wall panels, floor cabinets and copper wiring products.
The Data Center series provides all the products necessary to create a multi-service fibre optic infrastructure for residential buildings, in full compliance with all the indications dictated by the new CEI Guidelines 306-2 and Law 164/14.

Category	Pre-wired Apartment Optical Termination Box	Material	Plastic
Colour	White	Characteristics	With 4 SC/APC adapters
Dimensions LxHxD (mm)	101x85x31	Installation	Wall mount/In multimedia boards
No. optical fibers	4	Cable length	50 m
Ø sheath	3 mm	Ø pulling sheath	9 mm
For connectors	Standard	Classification	G.657.A2 / B6_a2 Bend Insensitive
Ø core	9 µm	Ø cladding	125 µm
Strength member	Kevlar	Outer jacket	LSZH
Cable	Loose - OS2	CPR class	Eca
Tension	100 N	Crush	500 N/10cm
Minimum bend radius (Dynamic)	20x cable diameter	Minimum bend radius (Static)	10x cable diameter
Max attenuation (@1310 nm / @1550 nm)	0.35 dB/Km (@1310 nm) / 0.2 dB/Km (@1550 nm)	Working temperature	From -20°C to +60°C

DIMENSIONAL

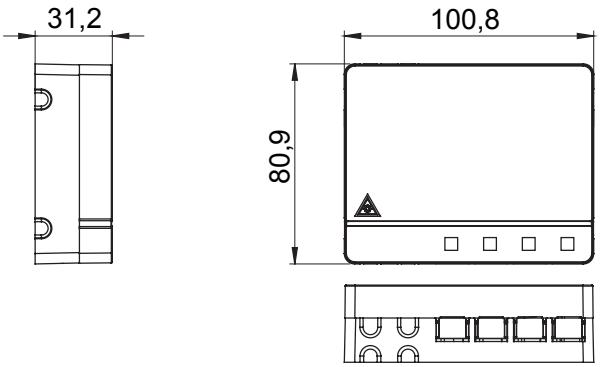

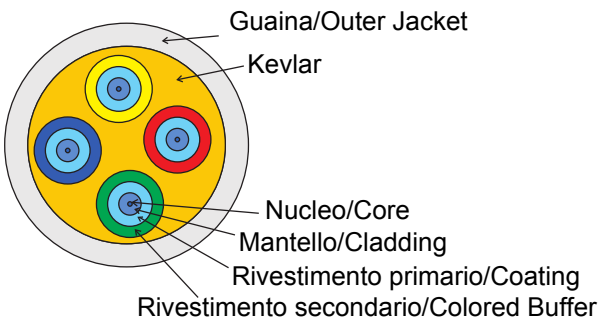

STANDARDS/APPROVALS

CE CE

GEWISS S.p.A. Via Domenico Bosatelli 1
24069 Cenate Sotto - Bergamo - Italy
tel. +39 035 94 61 11 fax +39 035 94 69 09

www.gewiss.com
sat@gewiss.com
Last update 15/05/2024

Data, measures, designs and pictures are shown only as informative purposes, and could be changed without previous notice