Product Data Sheet

GWF1100CL830

ELIA FL Mini

ELIA FL Mini is a low-power LED floodlight for indoor and outdoor architectural lighting for both residential and professional applications, such as façades, gardens, green areas and walkways. Available in 2 sizes and 3 power steps (10 W, 20 W and 30 W), the range allows for great flexibility with its multiple possible combinations: 2 colour temperature options (3,000 K warm white and 4,000 K neutral white) with a colour rendering index of more than 80, and 2 optics options (100° or asymmetrical). The fixture is equipped with an integrated On/Off electronic power supply, and it is also available with an integrated motion and luminosity sensor. The luminaire can be ceiling, wall or floor-mounted through the integrated adjustable steel bracket, and thanks to its black powder-coated die-cast aluminium body and its front glass, it is tough, durable and able to withstand harsh environmental conditions.

GENEL BİLGİLER	-
Bağlam	Residential facades, outdoor areas and garden lighting
armatür	Low-power LED floodlight
panoları	İç / Dış
Benzersiz dijital kod (Datamatrix)	Şu anda mevcut değil
Renk	Siyah
Işık kaynağı tipi	LED
Sistem gücü	30 W
LED Ömrü	L80B50 (Tq=25°C) > 90.000 h
Ağırlık (kg)	0.9
Garanti	5 yıl
Depolama sıcaklığı	-40° +80°
Çalışma sıcaklığı	-30° +50°
MATERYALLER	-
Gövde	Alüminyum pres döküm
Ekran tipi	Tempered 4mm-thick surface glass with Gewiss logo
Optik	High-efficiency lens and reflector unit
Conta	-
Kilitleme Kancası	-
Dış vida	Paslanmaz çelik
Renk	Toz kaplama
STANDARTLAR VE ONAYLAR	-
Sınıflandırma	-
Yüzey sıcaklığı azaltılmış cihaz	-
DIN 18032-3 belgesi	Müsait değil
IPEA	Green Areas A5+
Yalıtım sınıfı	I
IP derecesi	IP66
Direnç dayanıklı	IK08
Akkor Tel Deneyi:	750 °C

OPTİK VE AYDINLATICI ÖZELLİKLER	-
Optik	100°
Birleştirilmiş Parlama Derecelendirmesi	ULOR = 0%
Lümen çıkışı (lm)	3900
Efficacy (lm/W)	130
Renk Sıcaklık	3000 K
Colour Rendering Index	CRI 80
Standart Sapma Renk Eşleştirme	SDCM = 5
Fotobiyolojik Risk Sınıfı	RG1
Standart	EN 60598-1; EN 60598-2-5; IEC/TR 62778; EN 62493
ELETRİK VE AYDINLATMA ÖZELLİKLERİ	-
besleme voltaj	220-240 V
Nominal frekans (Hz)	50/60 Hz
sürücü	Yerleşik
Sürücü arıza oranı	F10 (Tq=25°C) > 80.000 h
aşırı gerilim koruması	DM 1KV / CM 2KV
Kontrol sistemi	AÇIK KAPALI
KURULUM VE BAKIM	-
Mounting and installation	Tavan - Duvar - Zemin
Eğim	Rotation on bracket
kablolama	Güç kablosu ile
için	Via integrated bracket
Işık kaynağı değiştirilebilirliği	değiştirilemez
Kontrol tertibatı değiştirilebilirliği	değiştirilemez
Sürücü Kutusu	Yerleşik
Rüzgara maruz maksimum yüzey	0,03 m2
	-
	-
	-
	-

DIMENSIONAL

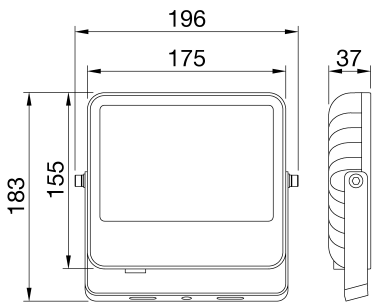

PHOTOMETRIC DISTRIBUTION

TECHNICAL SYMBOLOGY

0,03 m2

IP	IK	GWT
IP66	IK08	750 °C

Data, measures, designs and pictures are for information purpose only, last update 05/05/2024. They can be changed at any moment, therefore it is always ecommended to read the last updated version published on the website www.gewiss.com.Lumen output and system power are subject to a tolerance of +/- 10%. Unless stated otherwise, the values apply to an ambient temperature of 25°C. Terms of warranty at https://www.gewiss.com/it/en/company/landingpage/led-warranty. - 1 of 2

STANDARDS/APPROVALS

Data, measures, designs and pictures are for information purpose only, last update 05/05/2024. They can be changed at any moment, therefore it is always ecommended to read the last updated version published on the website www.gewiss.com.Lumen output and system power are subject to a tolerance of +/- 10%. Unless stated otherwise, the values apply to an ambient temperature of 25°C. Terms of warranty at https://www.gewiss.com/it/en/company/landingpage/led-warranty. - 2 of 2