Product Data Sheet

# DX54417

Gama DF

**Dispozitiv de cuplare drept şi rotativ pentru manta cu grad de protecție IP54.**

| | | | |
|---|---|---|---|
| Culoare | Gri RAL 7035 | Grad IP | IP54 |
| Pas PG | 16 | Manta Ø (mm) | 16 |
| Tipul pasului | PG16 | Tip | Rotativ |
| Electrocod | 210 | | |

## DIMENSIONAL

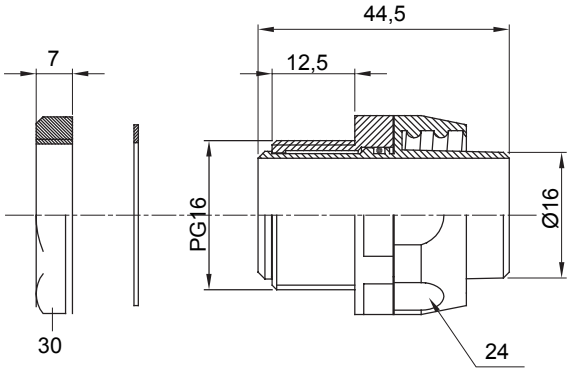


## TECHNICAL SYMBOLOGY

IP

IP54

## STANDARDS/APPROVALS

CE


**GEWISS S.p.A. Via Domenico Bosatelli 1**
**24069 Cenate Sotto - Bergamo - Italy**
**tel. +39 035 94 61 11 fax +39 035 94 69 09**

**www.gewiss.com**
**sat@gewiss.com**

**Last update 28/04/2024**


**Data, measures, designs and pictures are shown only as informative purposes, and could be changed without previous notice**