# Product Data Sheet

## GWD2189

90 MCB Range

| | |
|---|---|
| Description | MINIATURE CIRCUIT BREAKER |
| Code | MT 4 |
| No. of poles | 4P |
| No. modules | 4 |
| Rated current | 20 A |
| Curve | C |
| Rated voltage | 230-400 V |

| | | | |
|---|---|---|---|
| Standard | IEC EN 60898-1 | Rated frequency (f) | 50/60 Hz |
| Breaking capacity EN 60898 230V (Icn) | 4500 A | Breaking capacity EN 60898 400V (Icn) | 4500 A |
| Breaking capacity EN 60898 (Ics) | 1 x Icn | Breaking capacity IEC/EN 60947-2 230V (Icu) | 6 kA |
| Breaking capacity IEC/EN 60947-2 400V (Icu) | 6 kA | Breaking capacity IEC/EN 60947-2 (Ics) | 100% Icu |
| Insulation voltage (Ui) | 500 V | Rated impulse withstand voltage (Uimp) | 4 kV |
| Minimum operating voltage | 12 V ac | Maximum operating voltage | 440 V ac |
| Electrical endurance | 8000 | Mechanical endurance | 20.000 |
| Section rigid cable | <=1x25 - <=2x10 - <=1x16+1x10 mm² | Section flexible cable | <=1x35 - <=2x16 - <=1x16+2x10 mm² |
| Rated tightening torque | 2 Nm | Operating temperature | -25 ÷ 70°C (With temperatures greater than 30°C, derating of In rated current is expected) |
| Stocking temperature | -40°C ÷ +70°C | Can be accessorized | No |

## DIMENSIONAL

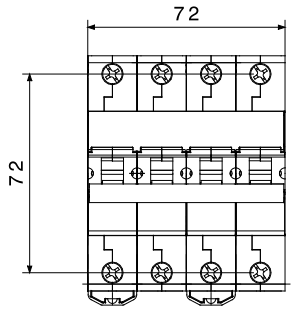


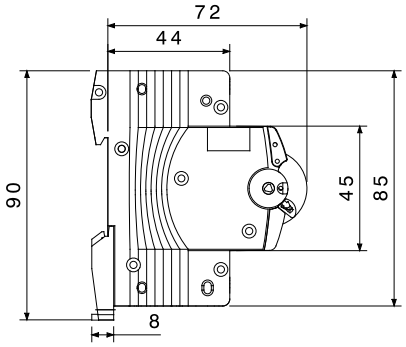


## STANDARDS/APPROVALS

GEWISS S.p.A. Via A. Volta, 1
24069 Cenate Sotto - Bergamo - Italy
tel. +39 035 94 61 11 fax +39 035 94 69 09
Company subject to the management and coordination of Polifin S.p.A.

www.gewiss.com
sat@gewiss.com
Last update 23/10/2026

Data, measures, designs and pictures are shown only as informative purposes, and could be changed without previous notice