Technical documentation

CHARGING ALL**WAYS**

powered by GEWISS

INTEGRITY

We create value for our customers by offering innovative and scalable solutions for every type of context, connecting people and things, and constantly **improving safety and quality of life.** We are guided every day by **strong integrity,** an innate **culture of excellence** and a propensity for **sustainability**.

EXCELLENCE

GEWISS' story is a long entrepreneurial journey that stems from **brilliant product ideas** and is based on the ability to interpret contemporaneity and **foresee the future**. Everyday creating something better **than the day before** exploring innovative solutions and maximizing every single potential. This is our **culture of excellence.**

SUSTAINABILITY

We act to reduce waste and **efficiently manage human, natural and financial resources.** We aim to give this value to our people, our customers, communities and future generations.

powered by GEWISS

WE ARE PLOTTING THE COURSE FOR SMART MOBILITY

JOINON is a charging solution for all new-generation electric vehicles that incudes both the technological infrastructure and full management, technical assistance and maintenance of the product. From the charging stations to the app and the platform for smart management of each unit, it is a complete system that makes **environmental sustainability a competitive factor for success**.
A solution that has been designed for every need and context - from restaurants to hotels, from sports centres to stadiums, from commercial outlets to private homes - making it the perfect destination for every owner of an electric or plug-in car.

Suitable for every electric vehicle

Ideal in any application context, both indoor and outdoor

Charging stations designed with exceptional strength

A turnkey solution, including charging station, cloud management platform and customer-specific assistance formulas

Table of contents

① I-CON EVO 12

② I-ON EVO 22

③ I-FAST 30

④ I-CORD 36

⑤ Services 38

⑥ myJOINON 40

⑦ Selection guide 43

⑧ Commercial technical tables 57

⑨ Technical specifications 75

⑩ Trade assistance 111

WALLBOX WITH FREE ACCESS

I-CON EVO wallboxes with free access have a compact size and sophisticated design, perfect for domestic and private use. Easily configurable with myJOINON app, they provide fast, safe and reliable charging of any vehicle, managing the active loads in accordance with international safety standards.

WALLBOX WITH CONTROLLED ACCESS

I-CON EVO wallboxes with controlled access are equipped with an innovative onboard portal that allows you to set the charging stations and to dynamically manage the loads, both for single and multi-unit Master/Slave configuration installations.

RESIDENTIAL INDUSTRY HOSPITALITY RETAIL

COLUMN

I-ON EVO columns are designed for semi-public and public environments, thanks to their high resistance to impact, chemical agents and mechanical stresses. Their unique style, with an exclusive hexagonal shape, allows the products to be integrated in any parking configuration. The presence of a graphical user interface at the charging sockets improves the interaction with the EV Drivers.

WALLBOX

I-ON EVO wallboxes are made of a robust anti-corrosion painted metal, making them suitable for public and semi-public environments. Despite their small size, they can simultaneously charge up to two electric vehicles with a power up to 22 kW each.

INDUSTRY HOSPITALITY OFFICE RETAIL SPORT CITY LANDSCAPE

UNIVERSAL CHARGING CABLE

I-CORD is a universal accessory for charging electric vehicles, supplied with a smooth or spiral cable and in standard lengths of 4, 5 and 8 m. The socket and plug are made with a range of technopolymers obtained from recycled nylon, make them ideal for projects where environmental consciousness is a key requirement.

DC CHARGING UNITS

I-FAST products are the JOINON solutions for fast DC charging, ideal for charging all types of electric vehicles in high-rotation contexts, such as public and private car parks, motorways, highways and service areas. The range includes **wall-mounted and movable wallboxes** (30 kW), **compact stations** (60 kW), **compact HPC stations** (240 kW), **stations** (modular from 90 to 180 kW), and **HPC stations** (modular from 320 to 480 kW). The design and finishes of I-FAST products make them suitable for urban and extra-urban settings, featuring a simple and intuitive graphical display for improved interactivity and ease of use for EV drivers.

WALLBOX
30 kW

MOVABLE
30 kW

COMPACT
60 kW

STATION
90-120-150-180 kW

HPC COMPACT
240 kW

HPC STATION
320-400-480 kW

HOSPITALITY · OFFICE · RETAIL · SPORT · CITY LANDSCAPE

RETAIL · SPORT · TRANSPORTATION · CITY LANDSCAPE

SERVICES

MANAGEMENT SOFTWARE AND DLM

JOINON charging stations can communcate via the OCPP 1.6 protocol, which allows them to be connected to the JOINON cloud management software, the platform used to supervise and control charging points remotely, with efficient charging power management both for public and private settings, thanks to the DLM (Dynamic Load Management) system.

I-CON evo

IK11

The I-CON EVO wallbox is an **AC charging unit** (Mode 3), ideal for private and semi-public use, suitable for all the main types of electric vehicles currently on the market.

It features a special **one-hand recharge** mode, numerous smart functions for smart management of loads (**DLM system**) and of energy produced by photovoltaic panels (**Solar Boost**), and multiple installation possibilities: flush, wall or floor mounted.

I-CON EVO is the first charging unit to pass **impact resistance** tests with an **IK11** rating.

Wallbox
with free access

Wallbox
with controlled access

CHARGING POWERS
- 7.4 kW / 32 A, single-phase
- 11 kW / 16 A, three-phase
- 22 kW / 32 A, three-phase

CONNECTIVITY
- WiFi
- Ethernet (standard for specific versions)
- 4G (optional for specific versions)
- Protocol: OCPP 1.6 J

USER INTERFACE
- myJOINON app
- Onboard portal

PROTECTIONS
- DC Leakage 6mA

PLUG/CONNECTOR TYPE
- Vandal-proof socket with Shutter
- Cable with Type 2 connector (5m) that can be wrapped around the wallbox

SMART FEATURES
- Dynamic Load Management (DLM), with provision for C.T. connection (GWJ8037 Single-phase/GWJ8038 Three-phase)
- Management of energy from photovoltaic panels (Solar Boost)
- Programming and monitoring via myJOINON app
- Master/Slave functionality for dynamic load management across multiple charging stations
- OTA update
- ISO 15118-2 communication (for specific versions)

	RESIDENTIAL	INDUSTRY	HOSPITALITY	RETAIL
Wallbox	■	■	■	■

The I-CON EVO wallboxes have three different charging process activation modes:

RESIDENTIAL

Free access or access via App

The charging stations do not require the use of a RFID card. To authenticate and start charging, simply use myJOINON app or set up the wallbox in Free access mode. I-CON EVO can connect to your home WiFi network or operate in Offline mode.
Suggested environments of use: private residential settings.

RESIDENTIAL INDUSTRY

Free access or access via App - connectable in Master/Slave mode

The charging stations do not require the use of a RFID card and to start charging you can simply use myJOINON app or set them for Free access. In addition, the app allows you to create networks with more connected charging points, simplifying the access, the metering process and the installation costs.
Suggested environment of use: condominium and/or business settings.

INDUSTRY HOSPITALITY RETAIL

Controlled access - connectable in Master/Slave mode

Charging stations operating in this mode are ideal for offering a free or paid charging service, in semi-public or public installation. Each charging station can be managed through backend monitoring, geolocalised and activated via the mobile App, RFID card and/or Roaming circuits.
Suggested environment of use: hotels, restaurants, businesses, shopping centres.

CHARGING ACTIVATION MODE
- Free access or access via App
- Free access or access via App with Master/Slave mode
- Controlled access with Master/Slave mode

SUSTAINABILITY
- I-CON EVO was developed with a focus on sustainability and environmental impact, starting from the recycled technopolymer used to make the charging unit's casing

MECHANICAL SPECIFICATIONS
- IP rating: IP55
- Impact resistance: IK11 (*)
- Installation: wall, flush, floor, back-to-back

(*) The test applies an impact energy of 50 J which is 2.5 times higher than the IK10 test.

wall-mounting

flush-mounting

floor-mounting

back-to-back installation

Features and benefits for the user

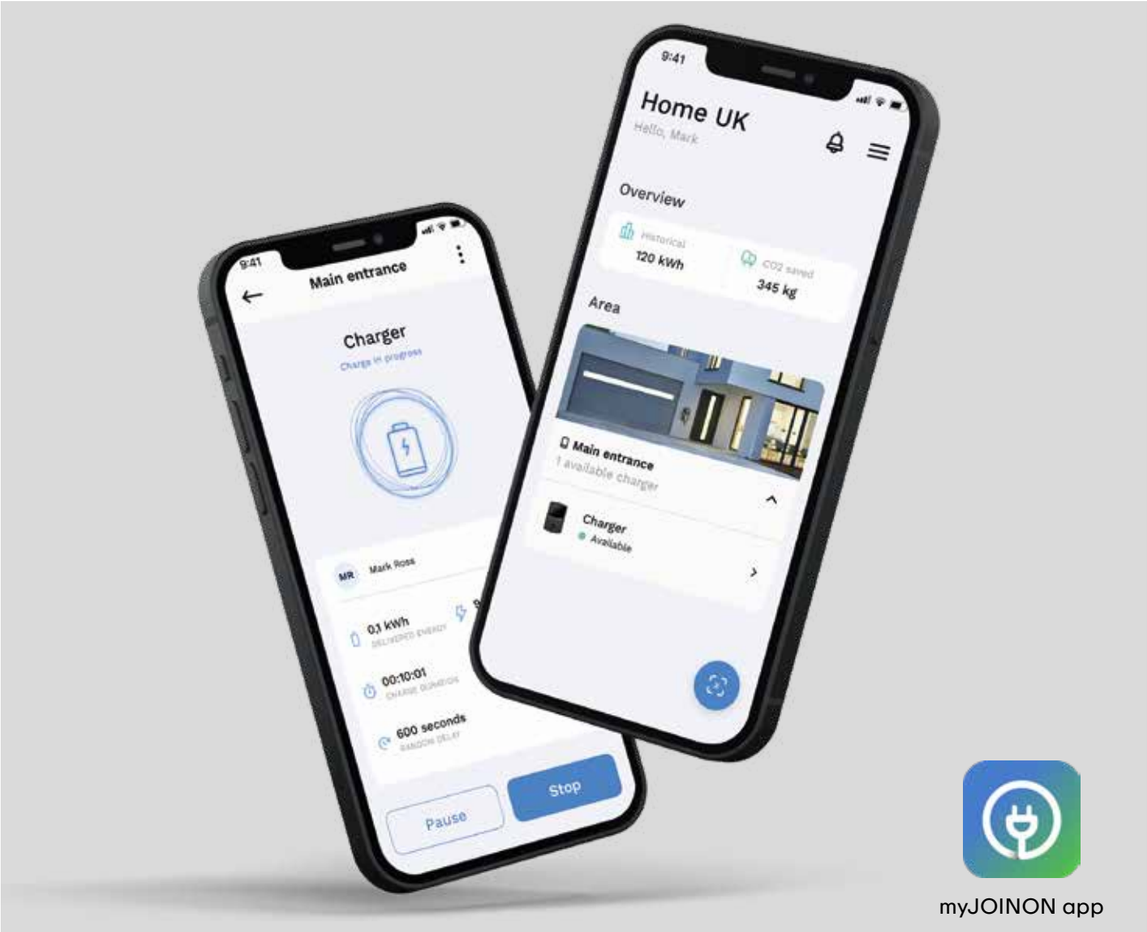

myJOINON app

one-hand recharge feature

minimal protrusion from the wall

myJOINON app

Dynamic Load Management (DLM)

REFINED AESTHETICS AND UNIQUE FUNCTIONS

CHARGING FACILITATED BY THE ONE-HAND RECHARGE SYSTEM

- Charging your electric vehicle is faster and more practical. Thanks to the one-hand recharge feature, you can connect the charging socket with one hand, so as to facilitate other unloading operations (shopping bags, packages, suitcases and more).

TOP LEVEL DESIGN AND ERGONOMICS

- The front of the I-CON EVO charging unit has an elegant design, suitable for any environment of use. If required, it can be made with special customisation to meet all the customer's needs.
- In the version with cable included, the socket handle has a practical, ergonomic shape, which improves the aesthetics and functionality of the entire product.
- I-CON EVO is the only wallbox for domestic use that allows flush installation, with minimum protrusion from the wall.

INTELLIGENT CHARGING MANAGEMENT

- In private installation, the Dynamic Load Management System (DLM), with C.T. up to 100A (GWJ8037 or GWJ8038) or through MID energy meter for higher currents (GWD6809), enables optimum charging power management, to avoid exceeding the maximum power available in the home. In addition, if combined with photovoltaic panels, it allows to use and optimize the generated energy. With myJOINON mobile app, you can program the charging of your vehicle from the comfort of your smartphone.
- For semi-public application, Dynamic Load Management (DLM) allows you to manage loads on one or more stations through the OCPP protocol.

INTUITIVE CHARGING INTERFACE

- I-CON EVO wallboxes with controlled access are equipped with an innovative onboard portal that allows you to set the charging stations and to dynamically manage the loads, both for single and multi-unit Master/Slave configuration installations.
- All the I-CON EVO versions can enable the charging session through myJOINON mobile app, which monitors ongoing consumptions.

PROTECTION AND SAVINGS ALWAYS ASSURED

- All I-CON EVO products are equipped with a DC Leakage device to protect against direct current leakage, ensuring significant economic savings and absolute protection of property and people.

Features and benefits for those who choose I-CON

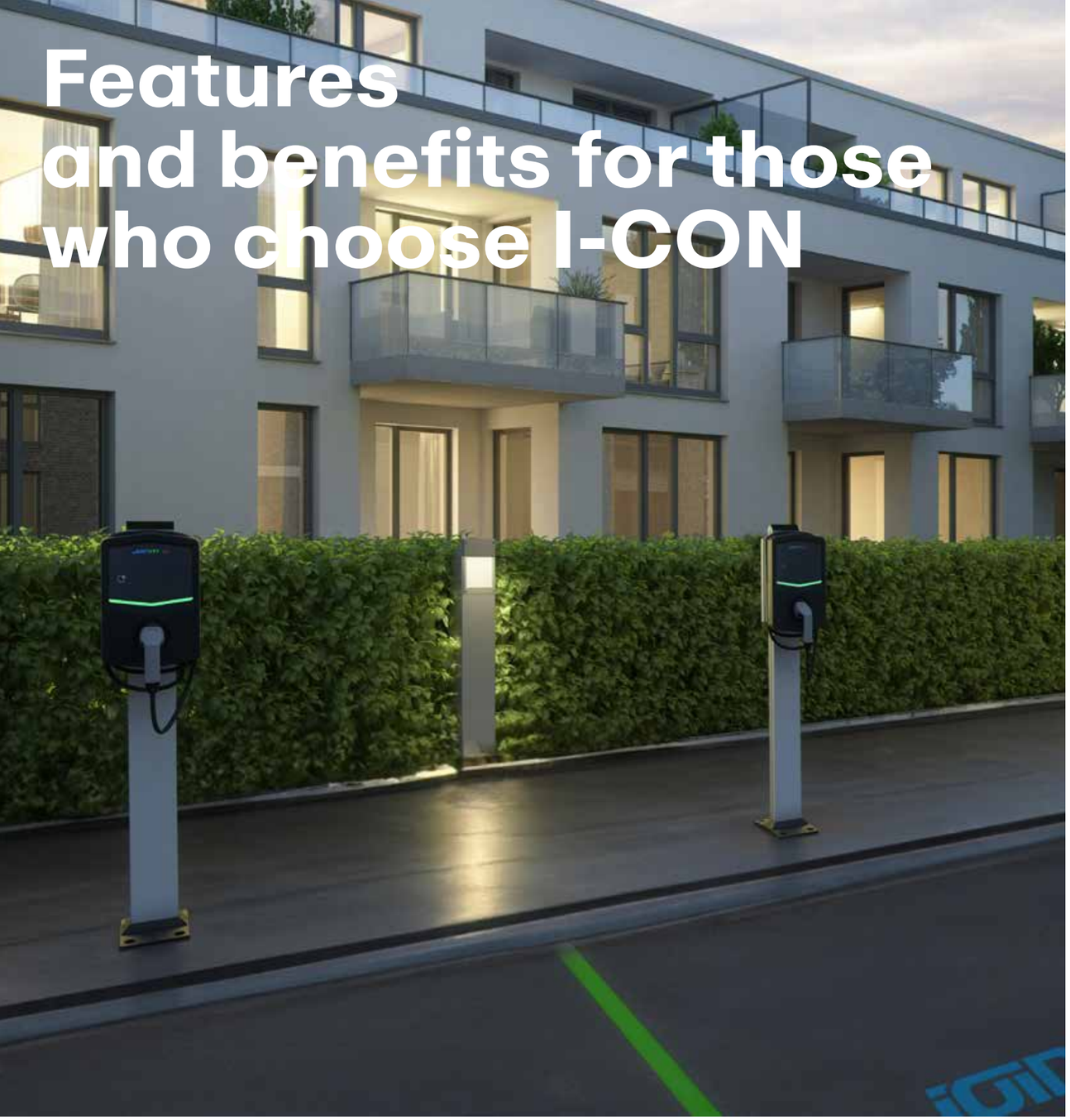

GREEN - available

BLUE - in use

RED - failure

SIMPLIFIED INSTALLATION AND MAINTENANCE WITH MADE-IN-GEWISS QUALITY

EASY AND FLEXIBLE INSTALLATION

- Each version of I-CON EVO is compact and easy to install, thanks to the front opening with ¼ turn screws. The water drainage system from the charging socket also makes it perfect for outdoor installations.
- The exclusive flush installation with base unit is the perfect solution for domestic installations in new buildings or where greater space optimization is needed.
- The wallbox can also be installed on the floor, with single or double-sided support.
- The charging stations can be configured even in the absence of connectivity using the myJOINON app for free access units, or alternatively the onboard portal, available on the entire range of I-CON EVO devices.

OFF-LINE OPERATION

- In the absence of connections, the stations with controlled access allow you to start charging via RFID card. Additionally, they store up to 10 days of logs and 5000 charging transactions.

FACILITATED MAINTENANCE

- Once opened, the front remains united to the base thanks to a hinged system, designed to facilitate access inside the product.
- myJOINON app makes it simple, immediate and intuitive to set up and maintain the charging station, allowing you to perform diagnostics from the convenience of your smartphone, without having to open or disassemble the unit.

COMPLIANT AND CERTIFIED PRODUCTS

- The products are compliant and certified in accordance with system standard IEC61851-1; in addition they are equipped with a protection device that cuts off the power in the event of a direct current fault exceeding 6mA.

ROBUST AND PROTECTED DEVICES

- The wallboxes are highly resistant to all types of stress (IK11), to ensure a perfect supply of energy always.
- I-CON EVO also guarantees the highest level of protection against dust and liquid penetration available on the market today: IP55.
- The devices are made of high quality materials, ideal for both indoor and outdoor installation.

front opening

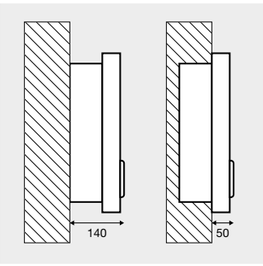

minimal protrusion

IP55 rating

IK11 impact resistance rating

Dynamic Load Management

SMART CHARGING IN DOMESTIC SETTINGS

Specially designed for domestic charging, the **Dynamic Load Management (DLM) system** allows you to charge your electric vehicle to the maximum power available in your home, by balancing the power available from the grid, power generated by photovoltaic panels (if present) and your home consumption. Depending on your wallbox settings, you can use a combination of available power or the power produced by photovoltaic panels.

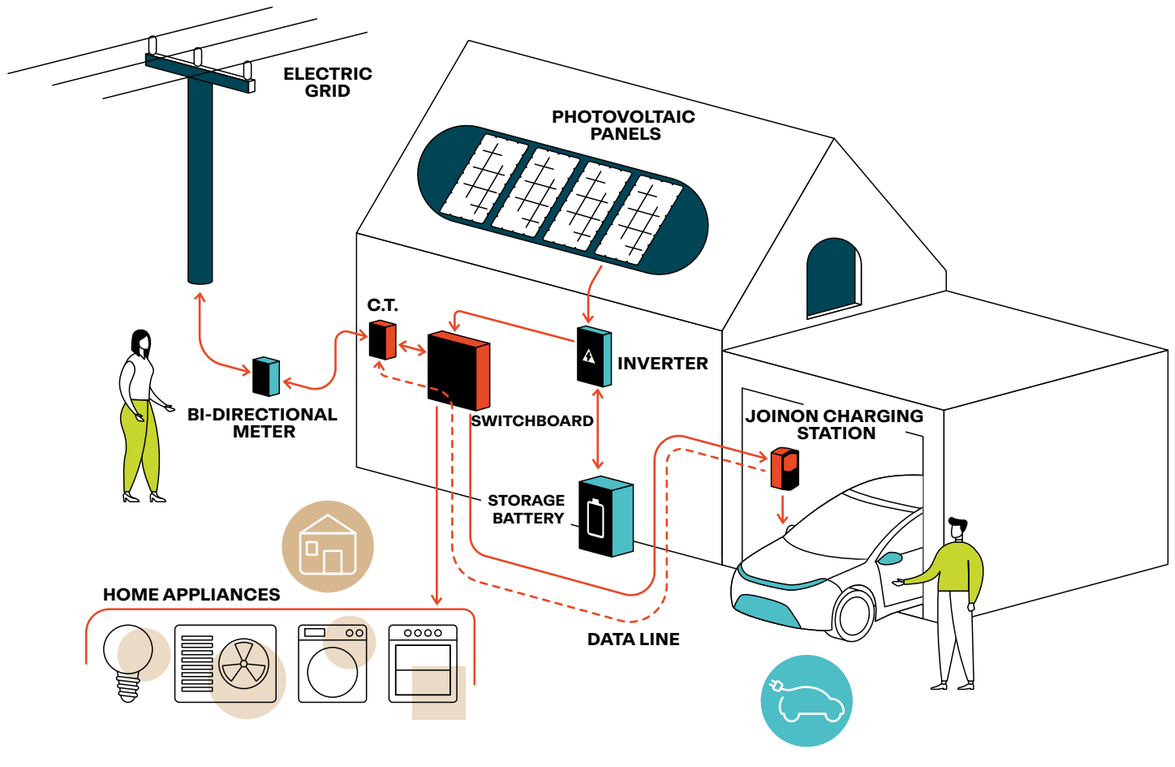

EXAMPLE OF HOUSEHOLD CONSUMPTION MANAGEMENT WITH A PHOTOVOLTAIC SYSTEM

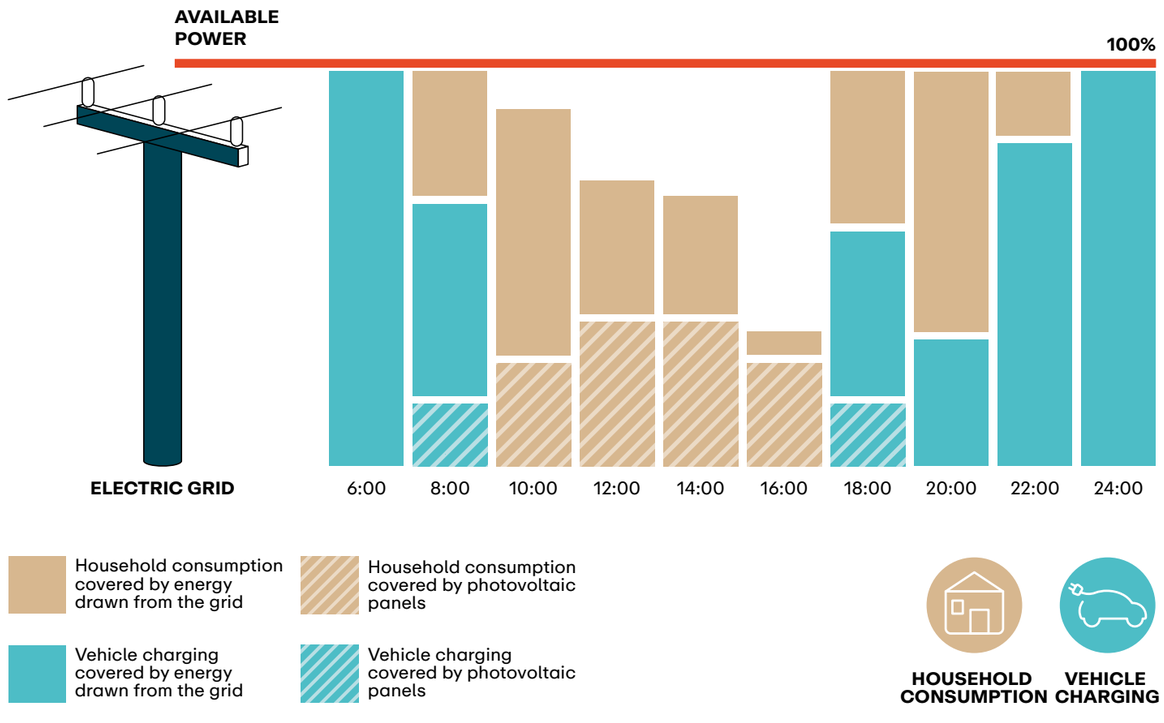

Depending on domestic consumption, the DLM dynamically assigns the maximum amount of charge available to the electric vehicle, taking into account the power draw limit of the grid and energy produced by photovoltaic panels.

I-ON evo

I-ON EVO charging stations are **AC charging units** (Mode 3), available for both floor and wall applications, suitable for all main types of electric vehicles on the market.

They are designed to adapt to **any urban context,** thanks to an innovative design, **IP55 rating** and the maximum resistance against shock, stress, vandalism and weather conditions: I-ON EVO are the first charging units (Column version) to pass **impact resistance** tests with an **IK11** rating.

IK11

Column

Wallbox

SMART FEATURES

- Dynamic Load Management (DLM), with provision for C.T. connection (GWJ8037 Single-phase/GWJ8038 Three-phase) up to 100 A or with MID energy meter (GWD6809) for higher currents
- Management of energy from photovoltaic panels (Solar Boost)
- Configuration and monitoring via onboard portal
- Master/Slave functionality for dynamic load management across multiple charging stations
- OTA update
- Language change button on display
- ISO 15118-2 communication (for specific versions)

CHARGING POWERS

- 2x 7.4 kW / 64 A, single-phase
- 2x 11 kW / 32 A, three-phase
- 2x 22 kW / 64 A, three-phase

CONNECTIVITY

- WiFi + Ethernet
- 4G (optional)
- Protocol: OCPP 1.6J

USER INTERFACE

- 4.3'' graphic display

PROTECTIONS

- RCCB type A + MCB (Column version)
- RCBO type A (Wallbox version)
- DC Leakage 6mA

PLUG/CONNECTOR TYPE

- 2x Type 2 vandal-proof sockets with shutter
- Cable with Type 2 connector (optional): spiral (4 m)

CHARGING ACTIVATION MODE

- Controlled access with Master/ Slave mode

MECHANICAL SPECIFICATION

- IP rating: IP55
- Impact resistance: IK11 (*) (Column version), IK10 (Wallbox version)
- Installation: wall, floor, back-to-back

(*) The test applies an impact energy of 50 J which is 2.5 times higher than the IK10 test.

	INDUSTRY	OFFICE	HOSPITALITY	RETAIL	SPORT	CITY LANDSCAPE
Column	■	■	■	■	■	■
Wallbox	■	■				

Features and benefits for the user

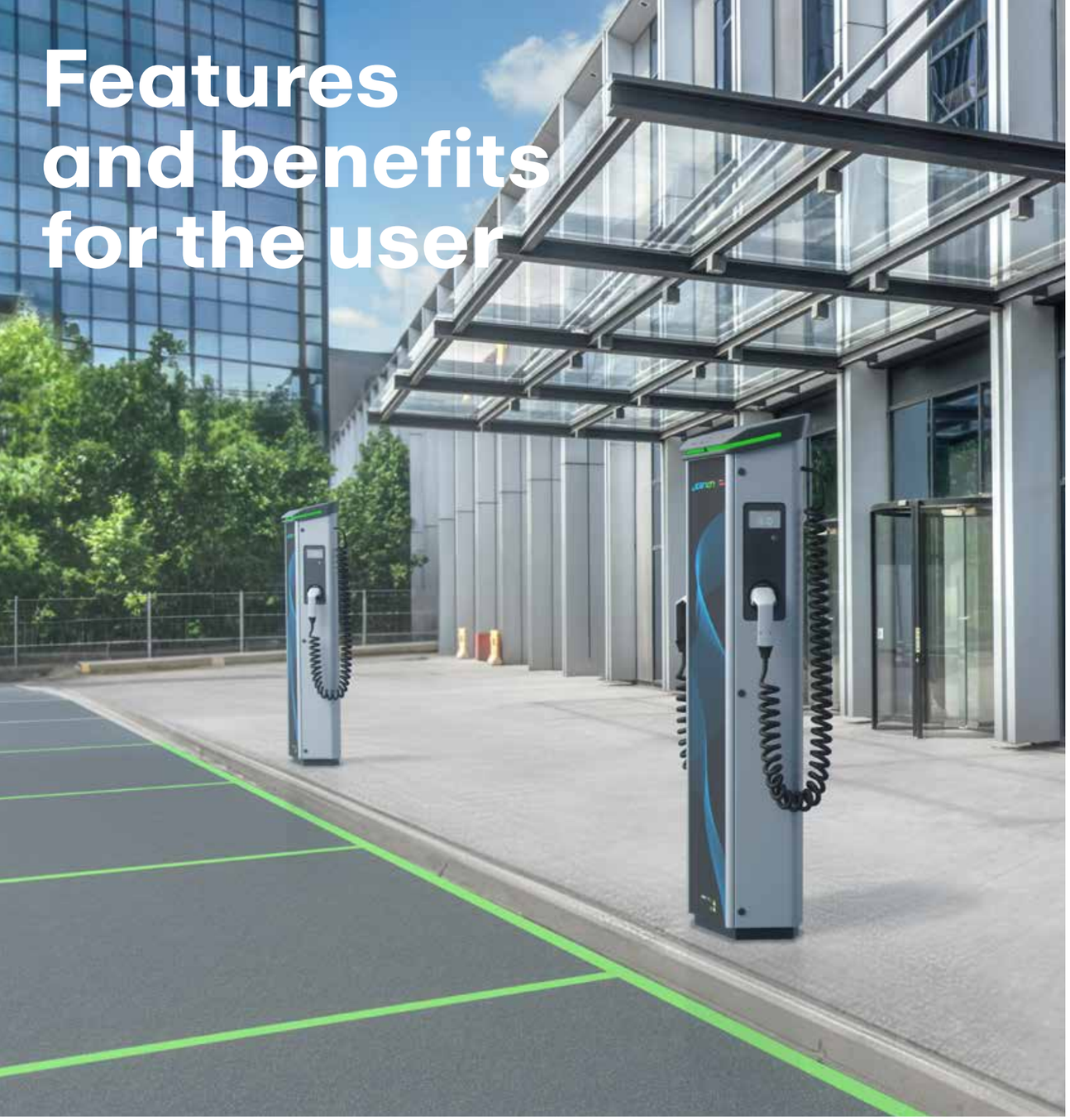

back-to-back installation

one-hand recharge feature

4.3” color graphic display

fully customisable

ATTRACTIVE DESIGN SUITABLE FOR ANY URBAN ENVIRONMENT

CHARGING FACILITATED BY THE ONE-HAND RECHARGE SYSTEM

- Charging your electric vehicle is faster and more practical. Thanks to the one-hand recharge feature, you can connect the charging socket with one hand, so as to facilitate other unloading operations (shopping bags, packages, suitcases and more).

DESIGN SUITABLE FOR ALL NEEDS

- A unique style, with an exclusive hexagonal shape, that integrates perfectly in any parking configuration, including back-to-back (two units joined back-to-back), with a considerable saving on installation costs.
- High-efficiency RGB LEDs, also visible remotely and from any side of the charging station.
- The front of the charging units features a 4.3’’ graphic interface that improves the user experience when charging the vehicle.

GUARANTEED STRENGTH AND PROTECTION

- Guarantee of total protection and durability over time, thanks to the high IP and IK ratings and external anti-corrosion treatments that allow its installation in any environment, even outdoors and for public access.

INTELLIGENT CHARGING MANAGEMENT

- Dynamic management of loads from one or more stations through the OCPP (DLM function) protocol to ensure the best load distribution, avoiding peaks or overloads and optimising the sizing costs of the electrical system.
- Possibility to create networks with multiple charging stations thanks to the Ethernet ports. You can also create networks in a daisy chain mode.
- An onboard portal also allows remote product configuration changes.

REDUCED OPERATING COSTS

- The quality of the products ensures significant savings over the product’s lifecycle. Costs are further reduced thanks to the customizable plans for regular and extraordinary maintenance.

Features and benefits for those who choose I-ON

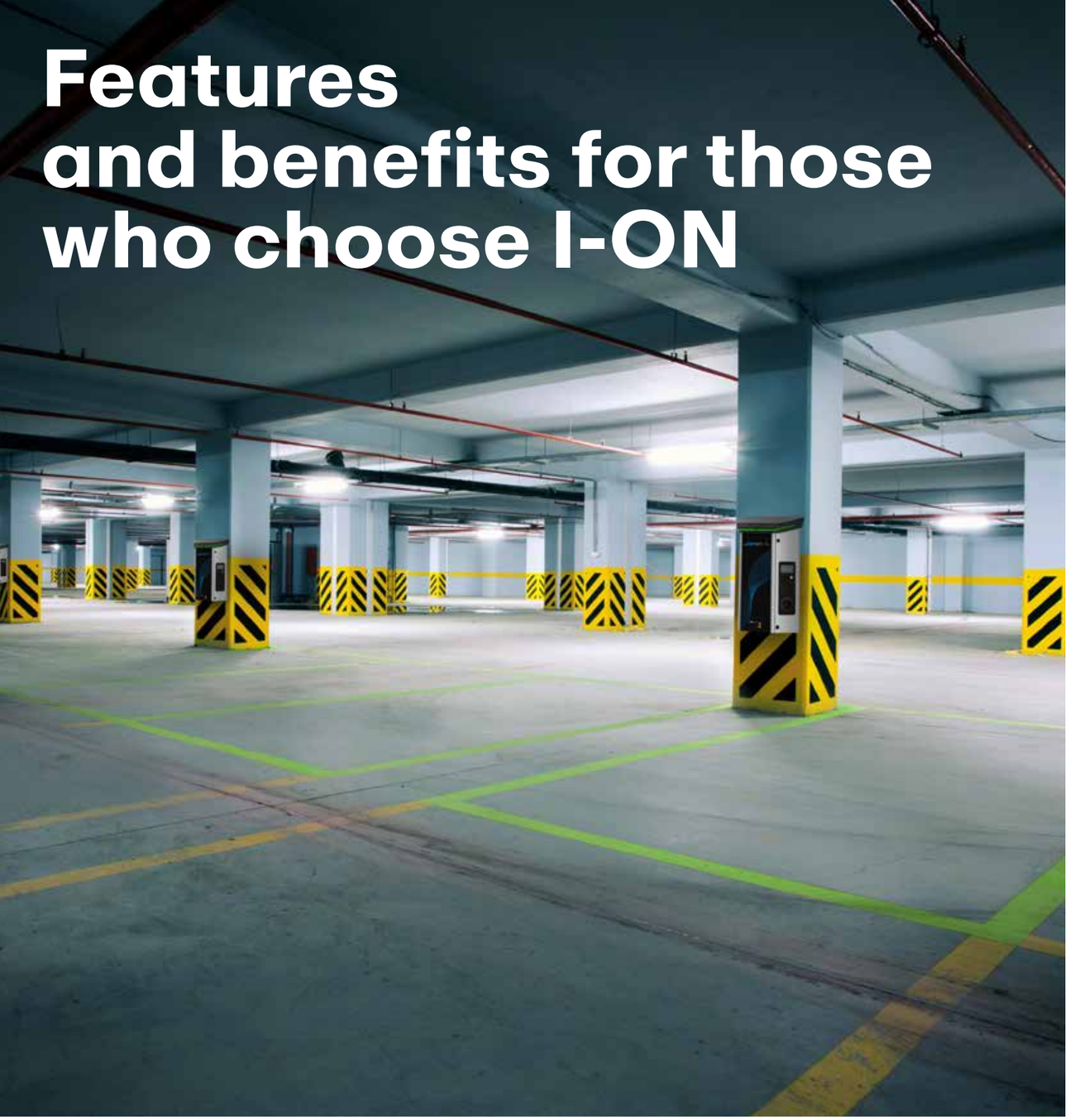

easy access

vandal-proof socket for public access

IP55 rating

IK11 impact resistance rating

EASY TO MAINTAIN, RELIABLE AND ROBUST

SIMPLIFIED MAINTENANCE AND SERVICE

- Maintenance of charging points is simple, convenient and economical. Electronic and electromechanical components are positioned in the front for ease of access, with tidy and logical internal wiring, thanks to the use of window or blind panels with the Fast & Easy system.
- Diagnostics in the event of malfunctions are immediate and intuitive: the RGB LEDs signal a fault status and the 4.3'' graphic display clearly communicates the type of error found for the fast and effective repairs.
- The charging stations can be configured even in the absence of connectivity using the onboard portal. Through this interface it is also possible to configure the DLM and the Master/Slave mode.

MECHANICAL STRENGTH AND PROTECTION

- All versions of I-ON EVO are manufactured with an anti-graffiti and anti-corrosion treatment compliant with EN ISO 12944 and class C4 corrosion resistance.
- Guarantee of the highest level of protection against dust and liquid penetration available on the market today (IP55) both plug-in and plug-out.
- The highest level of impact resistance, with a protection rating of up to IK11 (Column version) and IK10 (Wallbox version).

LESS UNSCHEDULED MAINTENANCE WORK

- **Corrosion resistance:** the anti-corrosion treatment on the products ensures greater resistance over time.
- **Vandal-proof sockets**: the Type 2 sockets on the units are vandal-proof and designed to withstand any stress.

GREEN - available

BLUE - in use

RED - failure

Dynamic Load Management

SMART CHARGING MANAGEMENT IN SEMI-PUBLIC AND PUBLIC AREAS

The **Dynamic Load Management (DLM) system** allows you to recharge the electric vehicles of your company fleet and/or employees, at maximum available power, at any time of the day, balancing the power supplied by the grid operator with power from photovoltaic panels (if present) and the consumption needs of the building.

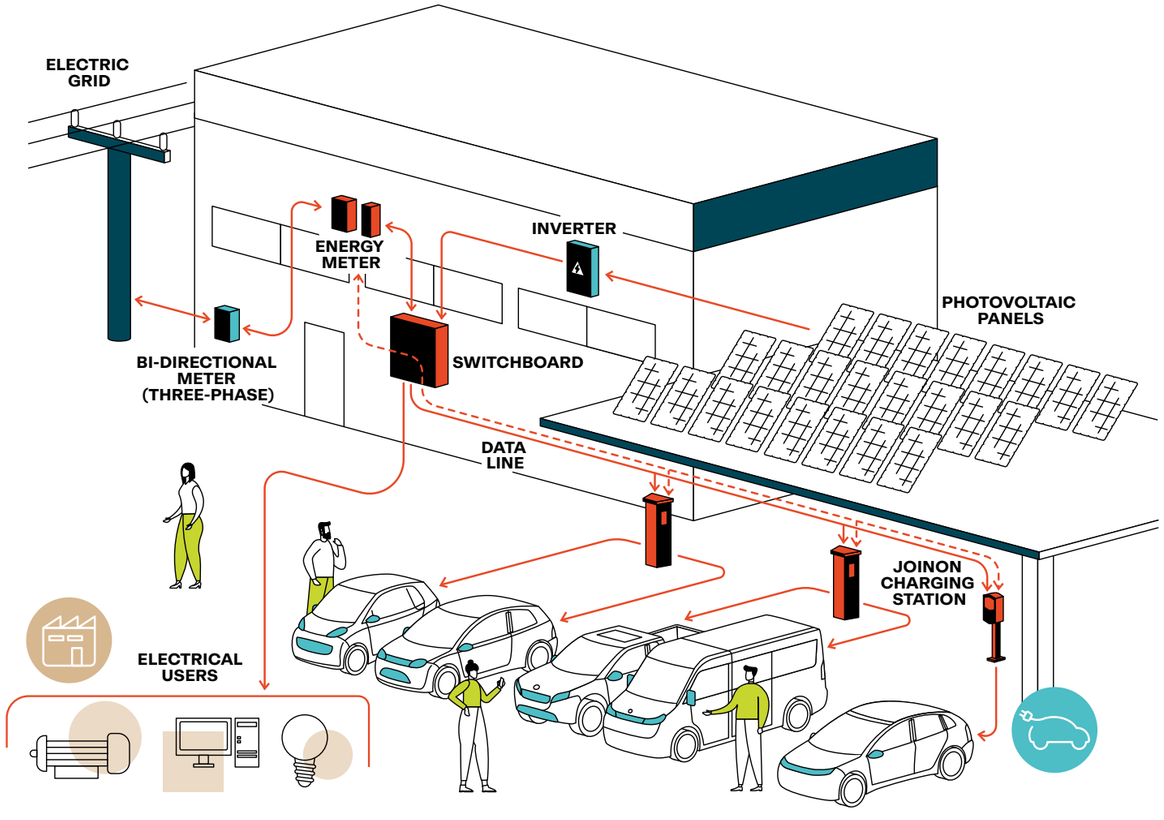

EXAMPLE OF CONSUMPTION MANAGEMENT IN COMPANY PREMISES WITH A PHOTOVOLTAIC SYSTEM

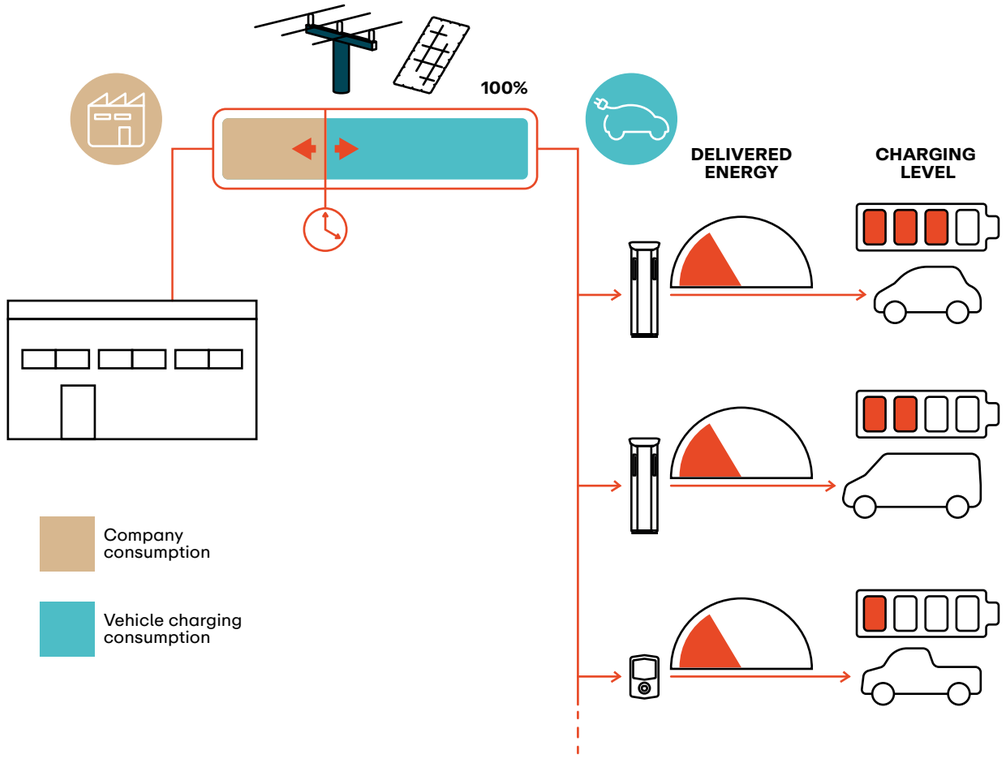

Based on the building's electricity consumption and photovoltaic energy production, which vary throughout the day, the DLM management system equally allots each electric vehicle connected for charging the amount of energy available. The DLM allows to connect up to 30 I-CON EVO wallboxes with controlled access, up to 15 I-ON EVO units or a maximum of 30 charging sockets in mixed I-CON EVO + I-ON EVO systems.

I-FAST is a range of **DC charging stations** (Mode 4) for all areas that require very fast charging times. Available in floor versions (Compact, Station, HPC Compact and HPC Station), wall-mounted (Wallbox) or mobile (Movable), they offer IP55 protection against weather agents and IK10 raing for resistance against impacts, stresses and acts of vandalism.

Compact

HPC Station

SMART FEATURES
- Onboard portal configuration and charging start via App or RFID card
- OTA update
- Versions equipped with 7-meter charging cables
- For models with power equal or higher to 60 kW, the configuration can include, upon request, a payment terminal, DC PTB energy meters and, for the 150 kW and 180 kW versions, CCS2 charging connectors with a peak output current up to 500 A
- 300 A cables with a 500 A peak, or liquid-cooled cables with a rated current of 500 A (only for 320-480 kW), are available on request

CHARGING POWERS
- 30 kW / 47 A, three-phase (Wallbox version)
- 60 kW / 115 A, three-phase (Compact version)
- 90 kW / 173 A, 120 kW / 230 A, 150 kW / 289 A, 180 kW / 345 A, three-phase (Station version)
- 240 kW / 460 A, three-phase (HPC Compact version)
- 320 kW / 587 A, 400 kW / 734 A, 480 kW / 880 A, three-phase (HPC Station version)

CONNECTIVITY
- WiFi + Ethernet
- 4G (optional)
- Protocols: CAN BUS, RS485, OCPP 1.6J

USER INTERFACE
- 7'' graphic display (for all stations, except the 240 kW)
- 21'' graphic display (default for 240 kW and optional for 320/480 kW)

PROTECTIONS
- Magnetothermal and differential protections on the charging station + Protections on modules from overcurrents and overvoltages

PLUG/CONNECTOR TYPE
- 1 CCS2 connector
- 2 CCS2 connectors
- 1 CCS2 + 1 CHAdeMO connector
- 1 CCS2 + 1 GBT connector
- Cable: smooth

CHARGING ACTIVATION MODE
- Controlled access

MECHANICAL SPECIFICATIONS
- IP rating: IP55
- Impact resistance: IK10
- Installation: wall, floor

	HOSPITALITY	OFFICE	RETAIL	SPORT	CITY LANDSCAPE	TRANSPORTATION
HPC Compact HPC Station			■	■	■	■
Compact Station			■	■	■	
Wallbox Movable	■	■	■			

Features and benefits for the user

7” graphic display

high-visibility LED strips

contactless payments

full connectivity

ATTRACTIVE DESIGN SUITABLE FOR ANY URBAN AND INTERCITY ENVIRONMENT

DESIGN SUITABLE FOR ALL NEEDS

- It integrates perfectly into the urban and intercity context, particularly in gas stations, shopping centres and parking lots.
- High-efficiency RGB LEDs, visible from a distance for instant recognition of the charging station’s operating status.
- Simple and intuitive interface, thanks to a 7” graphic monitor that improves the user experience while charging your vehicle.
- Also available with a contactless payment system.
- Scalable: the 90 kW charging station can be upgraded up to 180 kW (even at a later time).
- The 320 kW charging station can be upgraded up to 480 kW.

GUARANTEED STRENGTH AND PROTECTION

- A high level of protection from impacts, stresses and acts of vandalism, for a perfect supply of energy whatever the environmental conditions: IK10.
- Highest level of protection against dust and fluid penetration available on the market today: IP55.

INTELLIGENT CHARGING MANAGEMENT

- Dynamic management of the maximum power for each charging session according to the vehicle battery level, for I-FAST units, through the Load Sharing functionality.
- Creation of multiple charging-station networks thanks to various connectivity options, such as Ethernet and WiFi.
- An onboard portal also allows remote product configuration changes.

REDUCED OPERATING COSTS

- Lower maintenance costs (both ordinary and extraordinary) thanks to maximum reliability and robustness.
- Remote upgrading.
- Customizable service plans including an exclusive set of spare parts to minimize any potential risk of malfunction.

Features and benefits for those who choose I-FAST

easy access

simplified installation

configuration portal

IP55 rating

EASY TO MAINTAIN, RELIABLE AND ROBUST

SIMPLIFIED MAINTENANCE AND SERVICE

- Maintenance of charging points is simple, convenient and economical. Access to electronic and electromechanical components is facilitated by the front opening, while the modules can be easily added or removed from the side compartment.
- Diagnostics in the event of malfunctions is immediate and intuitive: the RGB LEDs signal a fault status and the 7" graphic display clearly communicates the type of error found for the fast and effective repairs.

MECHANICAL STRENGTH AND PROTECTION

- All versions of I-FAST are manufactured to resist any stress and guarantee perfect energy supply in any climatic condition (IK10).
- Guarantee of the highest level of protection against dust and liquid penetration available on the market today (IP55) both plug-in and plug-out.

CONNECTIVITY AND EASY CONFIGURATION

- The I-FAST charging stations can be networked via WiFi or Ethernet and 4G.
- Easy configuration thanks to the onboard portal.

GREEN - available

BLUE - in use

RED - failure

I-CORD

I-CORD is a **universal cable** for charging electric vehicles. Equipped with **Type 2 connectors**, it is designed to ensure an eco-friendly and fully sustainable approach through the use of recycled materials and easily replaceable components.

CHARGING POWER
- 4.6 kW / 7.4 kW, single-phase
- 11 kW / 22 kW, three-phase

PLUG/CONNECTOR TYPE
- T2 - T2

CABLE
- Type: smooth or spiral
- Length: 4 m / 5 m / 8 m

ENVIRONMENTAL SUSTAINABILITY
- Replaceable components: I-CORD is designed to be easily disassembled, ensuring simple replacement of all components and facilitating their end of life recycling
- Extended service life: the structure of the entire product is designed to increase the life of all its parts. No welded or glued parts, the various components are held together through screw systems
- Recycled materials: socket and plug are partly made from Renycle®, a range of special technopolymers obtained from recycled nylon, a high-value material with excellent durability and versatility
- Mono-material components: I-CORD uses single-material components to increase its recycling possibilities

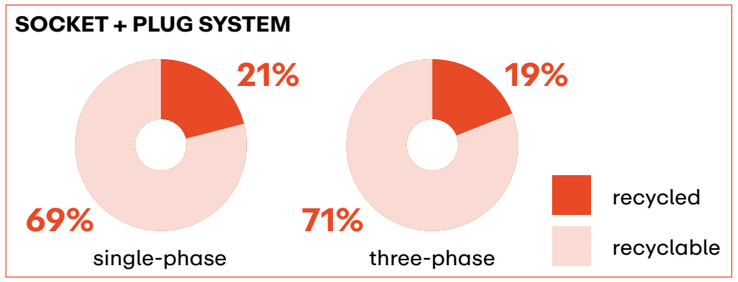

NOTE: the residual share not shown in the charts refers to technical components not included in the calculation of recycled and recyclable materials.

recycled materials

replaceable components

customisable plugs and sockets

68% recycled
100% recyclable

handy case

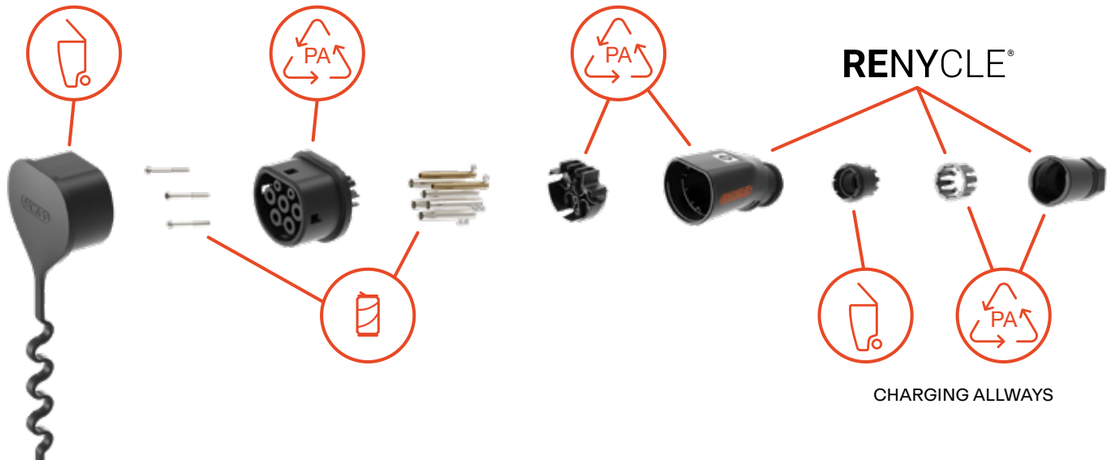

Services

SMALL NET
A NETWORK FOR PRIVATE USE

The new **SMALL NET** platform is the ideal solution for all private or semi-public contexts that do not need to make charging stations visible to the public, but require a tool for supervision and control of their infrastructures. Thanks to Small Net, you can monitor charging status, download reports, manage RFID cards and control the load management functions to optimise system costs.

MONITORING CHARGING | APP | REPORTING | LOADS MANAGEMENT

The **SMALL NET** platform is perfect for use in environments where access to charging stations is restricted and/or reserved. With SMALL NET, you can limit access to the charging stations to your fleet of EVs (Fleet Management), to company employees who own electric vehicles, to customers of a hospitality facility or to residents of a condominium charging network, maintaining control over access and costs.

INDUSTRY | OFFICE | HOSPITALITY | RETAIL

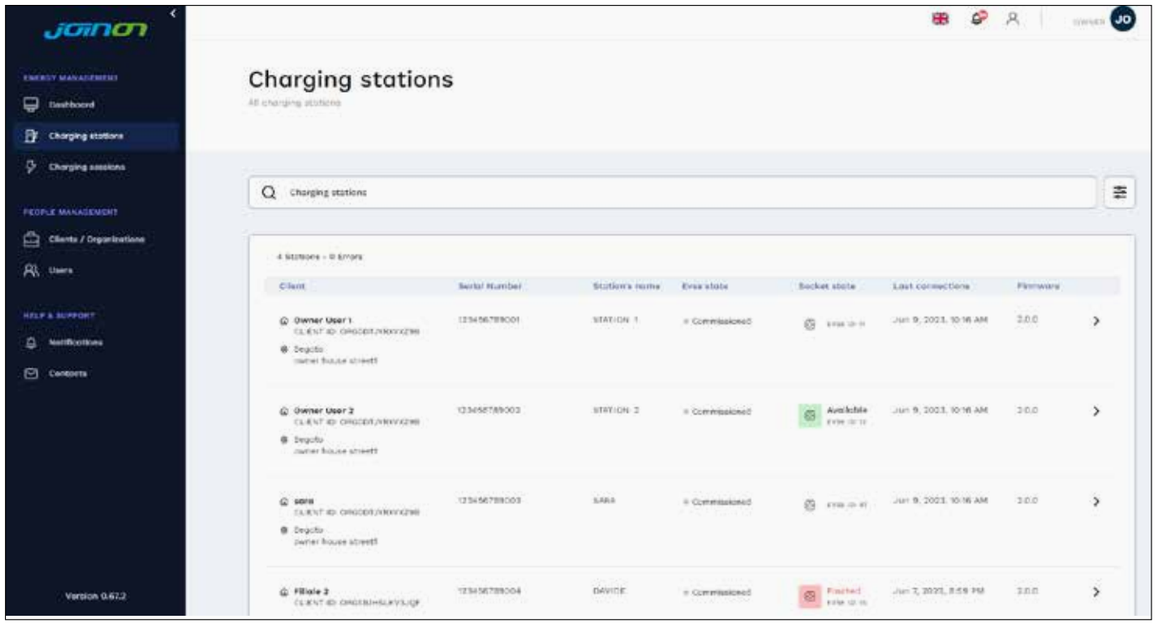

Key features of the platform include:
- Census of JOINON charging stations
- Definition of parking areas and controlled access to charging stations
- Charging station configuration
- Management and monitoring of users accessing charging infrastructure
- Address management
- Access to the platform through different profile levels
- Monitoring of consumption, data logging and export in EXCEL format

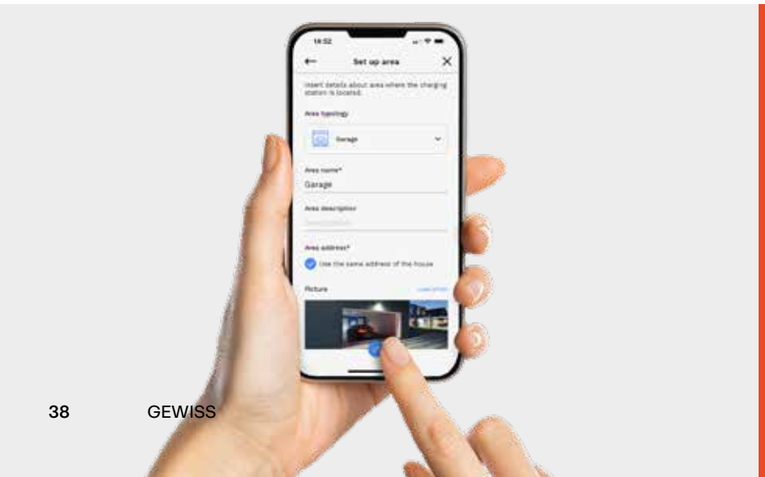

An app for every context

With **myJOINON** app you can manage your charging schedule at home, start or stop charging, check your consumption and much more.

myJOINON app

myJOINON

SINGLE APP FOR INSTALLER AND OWNER

The new **myJOINON** app, developed for private contexts (villas, multi-unit buildings, company fleet), allows you to configure the free access charging stations and monitor the consumption and charging status, easily, wherever you are, thanks to a simple and intuitive interface.

CONFIGURATION

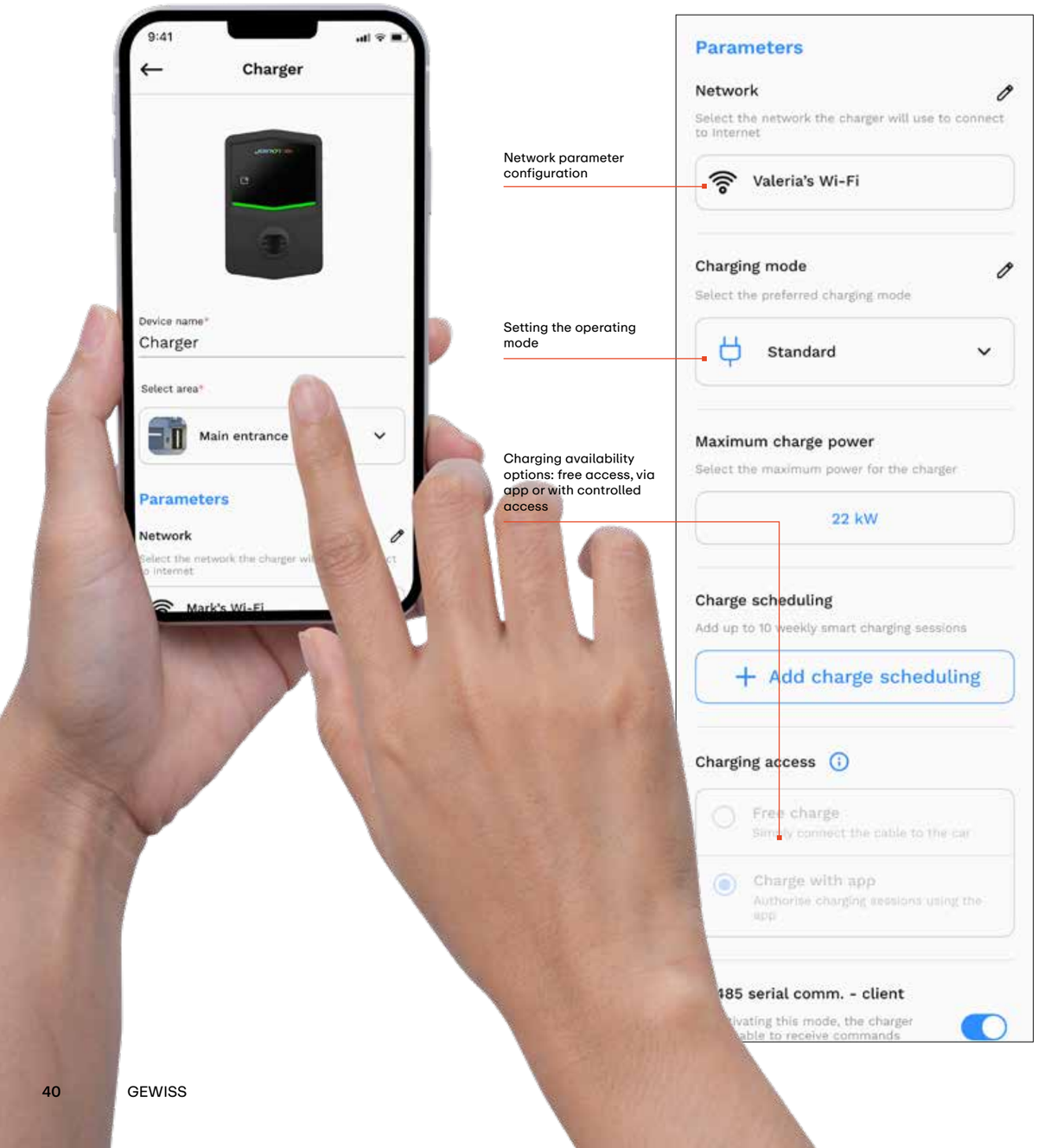

MAIN APP FEATURES

- Activation, monitoring and management of the charging process
- Display of the type of sockets available at the selected charging stations
- Display of charging history

Start of charging by scanning the QR-Code on the charging station (only for stations with controlled access)

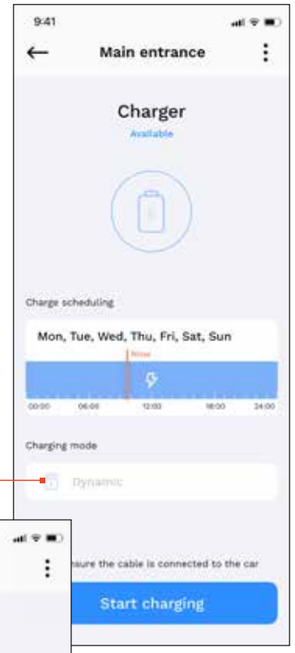

Operating mode: standard (with limitation on deliverable power) or dynamic DLM (with intelligent load management algorithm)

Monitor of the consumption of the charging session, pause in case another domestic appliance is switched on or simply conclusion of the session

Download on the App Store

Google play

Selection guide

I-CON EVO

AC charging units

PRIVATE / SEMI-PUBLIC USE

		Standard versions					
APPLICATION CONTEXT		Individual homes		Condominiums		Companies	
CASING TYPE		Thermoplastic					
DYNAMIC LOAD MANAGEMENT INCLUDING PHOTOVOLTAIC		Yes					
USER RECOGNITION		FREE + APP				RFID + APP	
ENERGY METER		Yes				Yes	
CONNECTIVITY		WiFi		WiFi + LAN		WiFi + LAN	
MASTER / SLAVE		No		Yes		Yes	
CHARGING CONNECTOR TYPE		Type 2 Mobile with cable	Type 2 Vandal-proof with shutter	Type 2 Mobile with cable	Type 2 Vandal-proof with shutter	Type 2 Mobile with cable	Type 2 Vandal-proof with shutter
MAXIMUM CHARGING POWER	7.4 kW	GW J3 412 C	GW J3 402 C	GW J3 512 G	GW J3 502 G	GW J3 612 T	GW J3 602 T
	11 kW	GW J3 413 C	-	GW J3 513 G	-	GW J3 613 T	GW J3 603 T
	22 kW	GW J3 414 C	GW J3 404 C	GW J3 514 G	GW J3 504 G	GW J3 614 T	GW J3 604 T

Notes: optional internal 4G modem available for specific versions. Upon request, versions compliant with the ISO 15118-2 communication standard are available.

AC charging units

PRIVATE / SEMI-PUBLIC USE

		Standard versions	
APPLICATION CONTEXT		Hotel, Restaurants, Shopping centres	
CASING TYPE		Thermoplastic	
DYNAMIC LOAD MANAGEMENT INCLUDING PHOTOVOLTAIC		Yes	
USER RECOGNITION		RFID + APP	
ENERGY METER		Yes, MID type	
CONNECTIVITY		WiFi + LAN	
MASTER / SLAVE		Yes	
CHARGING CONNECTOR TYPE		Type 2 Mobile with cable	Type 2 Vandal-proof with shutter
MAXIMUM CHARGING POWER	7.4 kW	GW J3 712 T	GW J3 702 T
	11 kW	-	-
	22 kW	GW J3 714 T	GW J3 704 T

Notes: optional internal 4G modem. Upon request, versions compliant with the ISO 15118-2 communication standard are available.

AC charging units

PRIVATE / SEMI-PUBLIC USE

		UK - PEN compliant			
APPLICATION CONTEXT		Individual homes	Condominiums	Companies	Hotel, Restaurants, Shopping centres
CASING TYPE		Thermoplastic			
DYNAMIC LOAD MANAGEMENT INCLUDING PHOTOVOLTAIC		Yes			Yes
USER RECOGNITION		FREE + APP		RFID + APP	RFID + APP
ENERGY METER		Yes			Yes
CONNECTIVITY		WiFi	WiFi + LAN		WiFi + LAN
MASTER / SLAVE		No	Yes		Yes
CHARGING CONNECTOR TYPE		Type 2 Vandal-proof with shutter			Type 2 Vandal-proof with shutter
MAXIMUM CHARGING POWER	7.4 kW	GW J3 402 CK	GW J3 502 GK	GW J3 602 TK	-
	11 kW	-	-	-	-
	22 kW	GW J3 404 CK	GW J3 504 GK	GW J3 604 TK	GW J3 704 TK

Notes: optional internal 4G modem available for specific versions. Upon request, versions compliant with the ISO 15118-2 communication standard are available.

AC charging units

PRIVATE / SEMI-PUBLIC USE

		FR - TIC compliant		
APPLICATION CONTEXT		Individual homes	Condominiums	Businesses, Hotel, Restaurants, Shopping centres
CASING TYPE		Thermoplastic		Thermoplastic
DYNAMIC LOAD MANAGEMENT INCLUDING PHOTOVOLTAIC		Yes		Yes
USER RECOGNITION		FREE + APP		RFID + APP
ENERGY METER		Yes		Yes
CONNECTIVITY		WiFi		WiFi + LAN
MASTER / SLAVE		No	Yes	Yes
CHARGING CONNECTOR TYPE		Type 2 Vandal-proof with shutter		Type 2 Vandal-proof with shutter
MAXIMUM CHARGING POWER	7.4 kW	GW J3 402 CF	GW J3 502 GF	GW J3 702 TF
	11 kW	-	-	-
	22 kW	GW J3 404 CF	GW J3 504 GF	GW J3 704 TF

Notes: optional internal 4G modem available for specific versions. Upon request, versions compliant with the ISO 15118-2 communication standard are available.

I-ON EVO

AC charging units

SEMI-PUBLIC / PUBLIC USE

		Standard versions					
APPLICATION CONTEXT		Companies, Hotel, Restaurants, Sport and Shopping centres, Public and Private car parks					
INSTALLATION TYPE		Wall-mounting		Floor-mounting			
CASING TYPE		Metal		Metal			
DYNAMIC LOAD MANAGEMENT		Yes		Yes			
CHARGING CONNECTOR TYPE		2 x Type 2 Vandal-proof with shutter		2 x Type 2 Vandal-proof with shutter		2 x Type 2 Spiral mobile connector	
USER RECOGNITION		RFID + APP	RFID + APP	RFID + APP		RFID + APP	
ENERGY METER		Yes	Yes, MID type	Yes	Yes, MID type	Yes	Yes, MID type
CONNECTIVITY		WiFi + LAN		WiFi + LAN		WiFi + LAN	
MASTER / SLAVE		Yes		Yes		Yes	
MAXIMUM CHARGING POWER	2x7.4 kW	GW J2 402 T	GW J2 502 T	GW J1 402 T	GW J1 502 T	GW J1 412 T	-
	2x11 kW	-	-	GW J1 403 T	-	-	-
	2x22 kW	GW J2 404 T	GW J2 504 T	GW J1 404 T	GW J1 504 T	GW J1 414 T	GW J1 514 T

Notes: optional internal 4G modem. Upon request, versions compliant with the ISO 15118-2 communication standard are available.

AC charging units

SEMI-PUBLIC / PUBLIC USE

		UK - PEN compliant	
APPLICATION CONTEXT		Companies, Hotel, Restaurants, Shopping centres, Public and Private car parks	
INSTALLATION TYPE		Wall-mounting	Floor-mounting
CASING TYPE		Metal	Metal
DYNAMIC LOAD MANAGEMENT		Yes	Yes
CHARGING CONNECTOR TYPE		2 x Type 2 Vandal-proof with shutter	2 x Type 2 Vandal-proof with shutter
USER RECOGNITION		RFID + APP	
ENERGY METER		Yes, MID type	Yes, MID type
CONNECTIVITY		WiFi + LAN	
MASTER / SLAVE		Yes	
MAXIMUM CHARGING POWER	2x7.4 kW	GW J2 502 TK	GW J1 502 TK
	2x22 kW	GW J2 504 TK	GW J1 504 TK

Notes: optional internal 4G modem. Upon request, versions compliant with the ISO 15118-2 communication standard are available.

AC charging units

SEMI-PUBLIC / PUBLIC USE

		FR - TIC compliant	
APPLICATION CONTEXT		Companies, Hotel, Restaurants, Shopping centres, Public and Private car parks	
INSTALLATION TYPE		Wall-mounting	Floor-mounting
CASING TYPE		Metal	Metal
DYNAMIC LOAD MANAGEMENT		Yes	Yes
CHARGING CONNECTOR TYPE		2 x Type 2 Vandal-proof with shutter	2 x Type 2 Vandal-proof with shutter
USER RECOGNITION		RFID + APP	
ENERGY METER		Yes, MID type	Yes, MID type
CONNECTIVITY		WiFi + LAN	
MASTER / SLAVE		Yes	
MAXIMUM CHARGING POWER	2x7.4 kW	GW J2 502 TF	GW J1 502 TF
	2x22 kW	GW J2 504 TF	GW J1 504 TF

Notes: optional internal 4G modem. Upon request, versions compliant with the ISO 15118-2 communication standard are available.

I-FAST

WALLBOX and MOVABLE

DC charging units

SEMI-PUBLIC / PUBLIC USE

		Standard versions		
APPLICATION CONTEXT		Offices, Hotel, Restaurants, Sport and Shopping centres, Public and Private car parks, Service stations, Motorways		
INSTALLATION TYPE		Wall- or Floor-mounting		Mobile
CASING TYPE		Metal		Metal
CHARGING CONNECTOR TYPE		1 x CCS2 (80 A) mobile connector	1 x CCS2 (80 A) + 1 x CHAdeMO (60 A) mobile connectors	1 x CCS2 (80 A) mobile connector
CONNECTIVITY		WiFi + LAN + 4G	WiFi + LAN + 4G	WiFi + LAN + 4G
USER RECOGNITION		App + RFID + QR Code	App + RFID + QR Code	App + RFID + QR Code
ENERGY METER		Yes, integrated DC Meter	Yes, integrated DC Meter	Yes, integrated DC Meter
MAXIMUM CHARGING POWER	30 kW	GW J9 011 W	GW J9 013 W	GW J9 811 W
	60 kW	-	-	-
	90 kW	-	-	-
	120 kW	-	-	-
	150 kW	-	-	-
	180 kW	-	-	-

Notes: possibility of floor installation via a dedicated accessory for GWJ9011W.

COMPACT

DC charging units

SEMI-PUBLIC / PUBLIC USE

		Standard versions			DE - EICHRECHT compliant
APPLICATION CONTEXT		Offices, Hotel, Restaurants, Sport and Shopping centres, Public and Private car parks, Service stations, Motorways			
INSTALLATION TYPE		Floor-mounting			
CASING TYPE		Metal			Metal
CHARGING CONNECTOR TYPE		2 x CCS2 mobile connectors	1 x CCS2 + 1 x CHAdeMO mobile connectors	1 x CCS2 + 1 x GBT mobile connectors	2 x CCS2 mobile connectors
CONNECTIVITY		WiFi + LAN + 4G	WiFi + LAN + 4G	WiFi + LAN + 4G	WiFi + LAN + 4G
USER RECOGNITION		App + RFID + QR Code	App + RFID + QR Code	App + RFID + QR Code	App + RFID + QR Code
ENERGY METER		Yes, integrated DC Meter	Yes, integrated DC Meter	Yes, integrated DC Meter	Yes, DC PTB Meter
MAXIMUM CHARGING POWER	30 kW	-	-	-	-
	60 kW	GW J9 122 Y	GW J9 123 Y	GW J9 126 Y	GW J9 122 H
	90 kW	-	-	-	
	120 kW	-	-	-	
	150 kW	-	-	-	
	180 kW	-	-	-	

Notes: a version with 7 m cables or payment terminal is available upon request.

I-FAST

STATION

DC charging units

SEMI-PUBLIC / PUBLIC USE

		Standard versions		
APPLICATION CONTEXT		Offices, Hotel, Restaurants, Sport and Shopping centres, Public and Private car parks, Service stations, Motorways		
INSTALLATION TYPE		Floor-mounting		
CASING TYPE		Metal		
CHARGING CONNECTOR TYPE		2 x CCS2 mobile connectors	1 x CCS2 + 1 x CHAdeMO mobile connectors	1 x CCS2 + 1 GBT mobile connectors
CONNECTIVITY		WiFi + LAN + 4G	WiFi + LAN + 4G	WiFi + LAN + 4G
USER RECOGNITION		App + RFID + QR Code	App + RFID + QR Code	App + RFID + QR Code
ENERGY METER		Yes, integrated DC Meter	Yes, integrated DC Meter	Yes, integrated DC Meter
MAXIMUM CHARGING POWER	30 kW	-	-	-
	60 kW	-	-	-
	90 kW	GW J9 232 Y	GW J9 233 Y	GW J9 236 Y
	120 kW	GW J9 242 Y	GW J9 243 Y	GW J9 246 Y
	150 kW	GW J9 252 Y	GW J9 253 Y	GW J9 256 Y
	180 kW	GW J9 262 Y	GW J9 263 Y	GW J9 266 Y

Notes: a version with 7 m and 9.5 m cables or payment terminal is available upon request. CCS2 connectors with a maximum output current of 300 A (peak at 500 A) can also be requested for 150 kW and 180 kW versions.

STATION

DC charging units

SEMI-PUBLIC / PUBLIC USE

		DE - EICHRECHT compliant
APPLICATION CONTEXT		Offices, Hotel, Restaurants, Sport and Shopping centres, Public and Private car parks, Service stations, Motorways
INSTALLATION TYPE		Floor-mounting
CASING TYPE		Metal
CHARGING CONNECTOR TYPE		2 x CCS2 mobile connectors
CONNECTIVITY		WiFi + LAN + 4G
USER RECOGNITION		App + RFID + QR Code
ENERGY METER		Yes, DC PTB Meter
MAXIMUM CHARGING POWER	30 kW	-
	60 kW	-
	90 kW	GW J9 232 H
	120 kW	GW J9 242 H
	150 kW	GW J9 252 H
	180 kW	GW J9 262 H

Notes: a version with 7 m and 9.5 m cables or payment terminal is available upon request. CCS2 connectors with a maximum output current of 300 A (peak at 500 A) can also be requested for 150 kW and 180 kW versions.

I-FAST

HPC COMPACT

DC charging units

			Standard versions		DE - EICHRECHT compliant
SEMI-PUBLIC / PUBLIC USE	APPLICATION CONTEXT		Sport and Shopping centres, Public and Private car parks, Service stations, Motorways, Logistics hubs		
	INSTALLATION TYPE		Floor-mounting		
	CASING TYPE		Metal		Metal
	CHARGING CONNECTOR TYPE		2 x CCS2 mobile connectors	1 x CCS2 + 1 x CHAdeMO mobile connectors	2 x CCS2 mobile connectors
	CONNECTIVITY		WiFi + LAN + 4G	WiFi + LAN + 4G	WiFi + LAN + 4G
	USER RECOGNITION		App + RFID + QR Code	App + RFID + QR Code	App + RFID + QR Code
	ENERGY METER		Yes, integrated DC Meter	Yes, integrated DC Meter	Yes, DC PTB Meter
	MAXIMUM CHARGING POWER	240 kW	GW J9 372 Y	GW J9 373 Y	GW J9 372 H
		320 kW	-	-	-
		400 kW	-	-	-
		480 kW	-	-	-

Notes: a version with 7 m cables or payment terminal is available upon request.

HPC STATION

DC charging units

			Standard versions	DE - EICHRECHT compliant
SEMI-PUBLIC / PUBLIC USE	APPLICATION CONTEXT		Sport and Shopping centres, Public and Private car parks, Service stations, Motorways, Logistics hubs	
	INSTALLATION TYPE		Floor-mounting	
	CASING TYPE		Metal	Metal
	CHARGING CONNECTOR TYPE		2 x CCS2 mobile connectors (optional 4x)	2 x CCS2 mobile connectors
	CONNECTIVITY		WiFi + LAN + 4G	WiFi + LAN + 4G
	USER RECOGNITION		App + RFID + QR Code	App + RFID + QR Code
	ENERGY METER		Yes, integrated DC Meter	Yes, DC PTB Meter
	MAXIMUM CHARGING POWER	240 kW	-	-
		320 kW	GW J9 482 Y	GW J9 482 H
		400 kW	GW J9 492 Y	GW J9 492 H
		480 kW	GW J9 402 Y	GW J9 402 H

Notes: a version with 7 m cables or payment terminal is available upon request. 500 A CCS2 liquid-cooled connectors can also be requested.

I-CORD

AC charging cables

FOR AC CHARGING UNITS

	Standard versions							
	SMOOTH							
CABLE TYPE								
MAXIMUM CURRENT	20 A		32 A		16 A		32 A	
MAXIMUM POWER	4.6 kW		7.4 kW		11 kW		22 kW	
VOLTAGE	230/250 V				380/480 V			
FREQUENCY	50-60 Hz				50-60 Hz			
CABLE LENGTH	5 m	8 m	5 m	8 m	5 m	8 m	5 m	8 m
NUMBER OF POLES	L1 - N - PE - CC - CP				L1/L2/L3 - N - PE - CC - CP			
CODE	GW J5 815 BL	GW J5 818 BL	GW J5 815 CL	GW J5 818 CL	GW J5 835 AL	GW J5 838 AL	GW J5 835 CL	GW J5 838 CL

AC charging cables

FOR AC CHARGING UNITS

	Standard versions	
	SPIRAL	
CABLE TYPE		
MAXIMUM CURRENT	32 A	32 A
MAXIMUM POWER	7.4 kW	22 kW
VOLTAGE	230/250 V	380/480 V
FREQUENCY	50-60 Hz	50-60 Hz
CABLE LENGTH	4 m (maximum extension)	4 m (maximum extension)
NUMBER OF POLES	L1 - N - PE - CC - CP	L1/L2/L3 - N - PE - CC - CP
CODE	GW J5 814 CT	GW J5 834 CT

Commercial technical tables

I-CON EVO

I-CON EVO CHARGING SYSTEMS FOR ELECTRIC VEHICLES - AC (MODE 3)

IP 55 **IK 11**

For residential scenarios

GW J3 412 C

I-CON EVO Wallbox - free access or via APP

Code	N. of sockets Type 2	Power max.	Protection integrated	Connectivity	RFID Reader	Energy meter	Pack Carton
Type of Socket: Vandal-proof recessed with shutter							
GW J3 402 C	1	7.4 kW	DC Leakage	WiFi	No	Yes	1
GW J3 404 C	1	22 kW	DC Leakage	WiFi	No	Yes	1
Type of Socket: Mobile with cable							
GW J3 412 C	1	7.4 kW	DC Leakage	WiFi	No	Yes	1
GW J3 413 C	1	11 kW	DC Leakage	WiFi	No	Yes	1
GW J3 414 C	1	22 kW	DC Leakage	WiFi	No	Yes	1

CHARACTERISTICS: charging solutions designed to ensure easy access to charging either with free access or with authorization via the myJOINON app. The charging power can be configured through the myJOINON app, which also allows users to monitor consumption, keep the wallbox constantly updated, receive notifications related to the system and the charging station status, and much more. For dynamic load management (DLM), we recommend GWJ8037 (single-phase) or GWJ8038 (three-phase) kits for systems up to 100 A in order to avoid overloads (and thus blackouts) and to use the Solar Boost feature that allows electric vehicles to be charged using excess energy from installed photovoltaic panels. Customizable front panel available upon request.

EQUIPMENT: LED indicators for user status signaling. Mobile connector versions equipped with a smooth 5-meter cable and integrated sheath.

For complex residential/condominium scenarios

GW J3 512 G

I-CON EVO Wallbox - free access or via APP connectable in Master/Slave

Code	N. of sockets Type 2	Power max.	Protection integrated	Connectivity	RFID Reader	Energy meter	Pack Carton
Type of Socket: Vandal-proof recessed with shutter							
GW J3 502 G	1	7.4 kW	DC Leakage	WiFi+Ethernet	No	Yes	1
GW J3 504 G	1	22 kW	DC Leakage	WiFi+Ethernet	No	Yes	1
Type of Socket: Mobile with cable							
GW J3 512 G	1	7.4 kW	DC Leakage	WiFi+Ethernet	No	Yes	1
GW J3 513 G	1	11 kW	DC Leakage	WiFi+Ethernet	No	Yes	1
GW J3 514 G	1	22 kW	DC Leakage	WiFi+Ethernet	No	Yes	1

CHARACTERISTICS: charging solutions designed to ensure access to charging either with free access or with authorization via the myJOINON app when the SMALL NET management platform is activated. The charging power can be configured through the onboard portal, which also allows checking the status of the charging station and reviewing logs. With the myJOINON app and the SMALL NET platform, users can monitor consumption, receive notifications related to the system and charging station status, and much more. For dynamic load management (DLM), we recommend GWJ8037 (single-phase) or GWJ8038 (three-phase) kits for systems up to 100 A in order to avoid overloads (and thus blackouts) and to use the Solar Boost feature that allows electric vehicles to be charged using excess energy from installed photovoltaic panels. For systems above 100 A, we recommend the use of the energy meter (GWD6809) in addition to the IP module (GWD6821) and closed amperometric transformers (code GW96447 to GW96453) available in the Energy Catalog. Using DLM, these products can be interconnected via Ethernet in Master/Slave mode to optimally balance the maximum charging power for each wallbox. Customizable front panel available upon request. Can be accessorized with a 4G modem kit (GWJ8111).

EQUIPMENT: LED indicators for user status signaling. Mobile connector versions equipped with a smooth 5-meter cable and integrated sheath.

For corporate or semi-public scenarios

GW J3 602 T

I-CON EVO Wallbox - controlled access connectable in Master/Slave

Code	N. of sockets Type 2	Power max.	Protection integrated	Connectivity	RFID Reader	Energy meter	Pack Carton
Type of Socket: Vandal-proof recessed with shutter							
GW J3 602 T	1	7.4 kW	DC Leakage	WiFi+Ethernet	Yes	Yes	1
GW J3 603 T	1	11 kW	DC Leakage	WiFi+Ethernet	Yes	Yes	1
GW J3 604 T	1	22 kW	DC Leakage	WiFi+Ethernet	Yes	Yes	1
Type of Socket: Mobile with cable							
GW J3 612 T	1	7.4 kW	DC Leakage	WiFi+Ethernet	Yes	Yes	1
GW J3 613 T	1	11 kW	DC Leakage	WiFi+Ethernet	Yes	Yes	1
GW J3 614 T	1	22 kW	DC Leakage	WiFi+Ethernet	Yes	Yes	1

CHARACTERISTICS: charging solutions designed to ensure controlled access to charging either with one or more RFID cards or with authorization via the myJOINON app when the SMALL NET management platform is activated. The charging power can be configured through the onboard portal, which also allows checking the status of the charging station, reviewing logs, and configuring the RFID cards if necessary. With the myJOINON app, users can monitor consumption, receive notifications related to the system and charging station status, and much more. For dynamic load management (DLM), we recommend GWJ8037 (single-phase) or GWJ8038 (three-phase) kits for systems up to 100 A in order to avoid overloads (and thus blackouts) and to use the Solar Boost feature that allows electric vehicles to be charged using excess energy from installed photovoltaic panels. For systems above 100 A, we recommend the use of the energy meter (GWD6809) in addition to the IP module (GWD6821) and closed amperometric transformers (code GW96447 to GW96453) available in the Energy Catalog. Using DLM, these products can be interconnected via Ethernet in Master/Slave mode to optimally balance the maximum charging power for each wallbox. Customizable front panel available upon request. Can be accessorized with a 4G modem kit (GWJ8111).

EQUIPMENT: LED indicators for user status signaling. Mobile connector versions equipped with a smooth 5-meter cable and integrated sheath. Includes 2 RFID user cards. Versions compliant with the ISO 15118-2 communication standard are available upon request.

For corporate or semi-public or public scenarios with MID meter

GW J3 702 T

I-CON EVO Wallbox - controlled access connectable in Master/Slave

Code	N. of sockets Type 2	Power max.	Protection integrated	Connectivity	RFID Reader	Energy meter	Pack Carton
Type of Socket: Vandal-proof recessed with shutter							
GW J3 702 T	1	7.4 kW	DC Leakage	WiFi+Ethernet	Yes	Yes, Type MID	1
GW J3 704 T	1	22 kW	DC Leakage	WiFi+Ethernet	Yes	Yes, Type MID	1
Type of Socket: Mobile with cable							
GW J3 712 T	1	7.4 kW	DC Leakage	WiFi+Ethernet	Yes	Yes, Type MID	1
GW J3 714 T	1	22 kW	DC Leakage	WiFi+Ethernet	Yes	Yes, Type MID	1

CHARACTERISTICS: charging solutions designed for offering a chargeable charging service or useful for consumption reporting, as they are equipped with a certified MID energy meter. They ensure controlled access to charging either with one or more RFID cards or with authorization through App when a third-party management platform is activated. The charging power can be configured through the onboard portal, which also allows checking the status of the charging station, reviewing logs, and configuring the RFID cards if necessary. For dynamic load management (DLM), we recommend GWJ8037 (single-phase) or GWJ8038 (three-phase) kits for systems up to 100 A in order to avoid overloads (and thus blackouts) and to use the Solar Boost feature that allows electric vehicles to be charged using excess energy from installed photovoltaic panels. For systems above 100 A, we recommend the use of the energy meter (GWD6809) in addition to the IP module (GWD6821) and closed amperometric transformers (code GW96447 to GW96453) available in the Energy Catalog. Using DLM, these products can be interconnected via Ethernet in Master/Slave mode to optimally balance the maximum charging power for each wallbox. Customizable front panel available upon request. Can be accessorized with a 4G modem kit (GWJ8111).

EQUIPMENT: LED indicators for user status signaling. Mobile connector versions equipped with a smooth 5-meter cable and integrated sheath. Includes 2 RFID user cards. Versions compliant with the ISO 15118-2 communication standard are available upon request.

I-CON EVO

COMPLEMENTS FOR INSTALLATION

I-CON EVO accessories

GW J8 037

Dynamic load management KIT

Code	Description	Suitable for	Pack Carton
GW D6 809	IP Energy Meter	Wallbox I-CON EVO	1/2
GW D6 821	IP Module	Wallbox I-CON EVO	1/5
GW J8 037	CT kit for single-phase DLM	Wallbox I-CON EVO	1
GW J8 038	CT kit for three-phase DLM	Wallbox I-CON EVO	1

NOTES: for dynamic load management in systems up to 100 A, we recommend the single-phase (GWJ8037) or three-phase (GWJ8038) DLM kits. For systems above 100 A, the dynamic load management solution requires the use of the energy meter (GWD6809) in addition to the IP module (GWD6821) and closed amperometric transformers (code GW96447 to GW96453) available in the Energy Catalog.

GW J8 002

RFID charging authorization card

Code	Description	Suitable for	Pack Carton
GW J8 002	JOINON card to enable the charging process	Wallbox I-CON EVO	1

GW J8 014

Communication system KIT

Code	Description	Suitable for	Pack Carton
GW J8 014	SIM Data JOINON	Wallbox I-CON EVO	1
GW J8 111	4G Modem Kit	Wallbox I-CON EVO	1
GW J8 113	Commissioning Kit	Wallbox I-CON EVO	1/10

NOTES: the 4G modem kit GWJ8111 can only be used with wallboxes designed for Master/Slave connection, due to the presence of an internal Ethernet connector.

GW J8 102

Complementary items for installation

Code	Description	Suitable for	Pack Carton
GW J8 101	Flush-mounting box	Wallbox I-CON EVO	1
GW J8 102	Floor-mounting support (single-sided)	Wallbox I-CON EVO	1
GW J8 103	Floor-mounting support (double-sided)	Wallbox I-CON EVO	1
GW J8 104	Protection cover	Wallbox I-CON EVO	1
GW J8 105	Charging cable holder	Wallbox I-CON EVO	1/4
GW J8 034	Metal plate for wall mounting	Wallbox I-CON EVO	1

NOTES: installation of the GWJ8104 protective cover or pole mounting of the wallbox using the GW46551 pole mounting kit requires the use of the GWJ8034 metal plate.

I-ON EVO

I-ON EVO CHARGING SYSTEMS FOR ELECTRIC VEHICLES - AC (MODE 3)

IP 55 IK 11 WiFi OCPP DLM SOLAR

Floor-mounted - for corporate or semi-public or public scenarios

GW J1 412 T

I-ON EVO Column - controlled access connectable in Master/Slave

RFID APP

Code	N. of sockets Type 2	Power max.	Protection integrated	Connectivity	RFID Reader	Energy meter	Pack Carton
Type of Socket: Vandal-proof recessed with shutter							
GW J1 402 T	2	7.4 kW + 7.4 kW	DC Leakage + MCB + RCD	WiFi+Ethernet	Yes	Yes	1
GW J1 403 T	2	11 kW + 11 kW	DC Leakage + MCB + RCD	WiFi+Ethernet	Yes	Yes	1
GW J1 404 T	2	22 kW + 22 kW	DC Leakage + MCB + RCD	WiFi+Ethernet	Yes	Yes	1
Type of Socket: Mobile with spiral cable							
GW J1 412 T	2	7.4 kW + 7.4 kW	DC Leakage + MCB + RCD	WiFi+Ethernet	Yes	Yes	1
GW J1 414 T	2	22 kW + 22 kW	DC Leakage + MCB + RCD	WiFi+Ethernet	Yes	Yes	1

CHARACTERISTICS: charging stations designed for ensuring controlled access to charging either with one or more RFID cards or with authorization through a third-party app when a management platform is activated. For dynamic load management (DLM), we recommend the use of the energy meter (GWD6809) in addition to the IP module (GWD6821) and closed amperometric transformers (code GW96447 to GW96453) available in the Energy Catalog on each socket in order to avoid overloads (and thus blackouts) and to use the Solar Boost feature that allows electric vehicles to be charged using excess energy from installed photovoltaic panels. Using DLM, these products can be interconnected via Ethernet in Master/Slave mode to optimally balance the maximum charging power for each charging station. Customizable front panel available upon request. Can be accessorized with a 4G modem kit (GWJ8013).

EQUIPMENT: no. 2 T2 socket modules, each equipped with a 4.3" color TFT display, a language selection button, and an RFID reader. LED indicators for user status signaling. Mobile connector versions equipped with a spiral cable with a maximum extension of 4 meters and integrated sheath. Includes 2 RFID user cards.

Floor-mounted - for corporate or semi-public or public scenarios with MID meter

GW J1 502 T

I-ON EVO Column - controlled access connectable in Master/Slave

RFID APP MID

Code	N. of sockets Type 2	Power max.	Protection integrated	Connectivity	RFID Reader	Energy meter	Pack Carton
Type of Socket: Vandal-proof recessed with shutter							
GW J1 502 T	2	7.4 kW + 7.4 kW	DC Leakage + MCB + RCD	WiFi+Ethernet	Yes	Yes, Type MID	1
GW J1 504 T	2	22 kW + 22 kW	DC Leakage + MCB + RCD	WiFi+Ethernet	Yes	Yes, Type MID	1
Type of Socket: Mobile with spiral cable							
GW J1 514 T	2	22 kW + 22 kW	DC Leakage + MCB + RCD	WiFi+Ethernet	Yes	Yes, Type MID	1

CHARACTERISTICS: charging solutions designed for offering a chargeable charging service or for consumption reporting, as they are equipped with a certified MID energy meter. They ensure controlled access to charging either with one or more RFID cards with authorization through a third-party app when a management platform is activated. For dynamic load management (DLM), we recommend the use of the energy meter (GWD6809) in addition to the IP module (GWD6821) and closed amperometric transformers (code GW96447 to GW96453) available in the Energy Catalog on each socket in order to avoid overloads (and thus blackouts) and to use the Solar Boost feature that allows electric vehicles to be charged using excess energy from installed photovoltaic panels. Using DLM, these products can be interconnected via Ethernet in Master/Slave mode to optimally balance the maximum charging power for each charging station. Customizable front panel available upon request. Can be accessorized with a 4G modem kit (GWJ8013).

EQUIPMENT: no. 2 T2 socket modules, each equipped with a 4.3" color TFT display, a language selection button, and an RFID reader. LED indicators for user status signaling. Mobile connector versions equipped with a spiral cable with a maximum extension of 4 meters and integrated sheath. Includes 2 RFID user cards. Versions compliant with the ISO 15118-2 communication standard are available upon request.

WALLBOX I-ON EVO CHARGING SYSTEMS FOR ELECTRIC VEHICLES - AC (MODE 3)

IP 55 IK 10 WiFi OCPP DLM SOLAR

Wall-mounted - for corporate or semi-public or public scenarios

GW J2 402 T

I-ON EVO Wallbox - controlled access connectable in Master/Slave

RFID APP

Code	N. of sockets Type 2	Power max.	Protection integrated	Connectivity	RFID Reader	Energy meter	Pack Carton
Type of Socket: Vandal-proof recessed with shutter							
GW J2 402 T	2	7.4 kW + 7.4 kW	DC Leakage + RCBO	WiFi+Ethernet	Yes	Yes	1
GW J2 404 T	2	22 kW + 22 kW	DC Leakage + RCBO	WiFi+Ethernet	Yes	Yes	1

CHARACTERISTICS: charging stations designed for ensuring controlled access to charging either with one or more RFID cards or with authorization through a third-party app when a management platform is activated. For dynamic load management (DLM), we recommend the use of the energy meter (GWD6809) in addition to the IP module (GWD6821) and closed amperometric transformers (code GW96447 to GW96453) available in the Energy Catalog on each socket in order to avoid overloads (and thus blackouts) and to use the Solar Boost feature that allows electric vehicles to be charged using excess energy from installed photovoltaic panels. Using DLM, these products can be interconnected via Ethernet in Master/Slave mode to optimally balance the maximum charging power for each charging station. Customizable front panel available upon request. Can be accessorized with a 4G modem kit (GWJ8013).

EQUIPMENT: no. 2 T2 socket modules, each equipped with a 4.3" color TFT display, a language selection button, and an RFID reader. LED indicators for user status signaling. Includes 2 RFID user cards.

Wall-mounted - for corporate or semi-public or public scenarios with MID meter

GW J2 502 T

I-ON EVO Wallbox - controlled access connectable in Master/Slave

RFID APP MID

Code	N. of sockets Type 2	Power max.	Protection integrated	Connectivity	RFID Reader	Energy meter	Pack Carton
Type of Socket: Vandal-proof recessed with shutter							
GW J2 502 T	2	7.4 kW + 7.4 kW	DC Leakage + RCBO	WiFi+Ethernet	Yes	Yes, Type MID	1
GW J2 504 T	2	22 kW + 22 kW	DC Leakage + RCBO	WiFi+Ethernet	Yes	Yes, Type MID	1

CHARACTERISTICS: charging solutions designed for offering a chargeable charging service or for consumption reporting, as they are equipped with a certified MID energy meter. They ensure controlled access to charging either with one or more RFID cards or with authorization through a third-party app and platform. For dynamic load management (DLM), we recommend the use of the energy meter (GWD6809) in addition to the IP module (GWD6821) and closed amperometric transformers (code GW96447 to GW96453) available in the Energy Catalog on each socket in order to avoid overloads (and thus blackouts) and to use the Solar Boost feature that allows electric vehicles to be charged using excess energy from installed photovoltaic panels. Using DLM, these products can be interconnected via Ethernet in Master/Slave mode to optimally balance the maximum charging power for each charging station. Customizable front panel available upon request. Can be accessorized with a 4G modem kit (GWJ8013).

EQUIPMENT: no. 2 T2 socket modules, each equipped with a 4.3" color TFT display, a language selection button, and an RFID reader. LED indicators for user status signaling. Includes 2 RFID user cards. Versions compliant with the ISO 15118-2 communication standard are available upon request.

I-ON EVO

COMPLEMENTS FOR INSTALLATION

I-ON EVO accessories

GW J8 038

Dynamic load management KIT

Code	Description	Suitable for	Pack Carton
GW D6 809	IP Energy Meter	I-ON EVO and I-ON EVO WALL	1/2
GW D6 821	IP Module	I-ON EVO and I-ON EVO WALL	1/5
GW J8 037	CT kit for single-phase DLM	I-ON EVO and I-ON EVO WALL	1
GW J8 038	CT kit for three-phase DLM	I-ON EVO and I-ON EVO WALL	1

NOTES: for dynamic load management in systems up to 100 A, we recommend the single-phase (GWJ8037) or three-phase (GWJ8038) DLM kits. For systems above 100 A, the dynamic load management solution requires the use of the energy meter (GWD6809) in addition to the IP module (GWD6821) and closed amperometric transformers (code GW96447 to GW96453) available in the Energy Catalog.

GW J8 002

RFID charging authorization card

Code	Description	Suitable for	Pack Carton
GW J8 002	JOINON card to enable the charging process	I-ON EVO and I-ON EVO WALL	1

GW J8 014

Communication system KIT

Code	Description	Suitable for	Pack Carton
GW J8 014	SIM Data JOINON	I-ON EVO and I-ON EVO WALL	1
GW J8 013	4G Modem Kit	I-ON EVO and I-ON EVO WALL	1
GW J8 114	Commissioning Kit	I-ON EVO and I-ON EVO WALL	1/10

NOTES: the commissioning kit GWJ8114 includes the JOINON data SIM and the QR Code sticker, which helps facilitate charging authorization via the app. For each data SIM, different tariff plans can be activated depending on the number of stations connected to the 4G modem.

GW J8 021

Complementary items for installation

Code	Description	Suitable for	Pack Carton
GW J8 021	Concrete ground fixing plate	I-ON EVO	1
GW 46 551	Pole support KIT	I-ON EVO WALL	1

I-FAST

I-FAST CHARGING SYSTEMS FOR ELECTRIC VEHICLES - DC (MODE 4)

IP 55 IK 10 WiFi OCPP

I-FAST WALLBOX

GW J9 011 W

30kW DC Wallbox

RFID APP

Code	No. of sockets	Power max.	Max output current	RFID Reader	Meter	Payment terminal	Pack Carton
GW J9 011 W	1	30 kW	CCS2: 80 A	Yes	Integrated DC Meter	No	1
GW J9 013 W	1 + 1	30 kW	CCS2: 80 A - CHAdeMO: 60 A	Yes	Integrated DC Meter	No	1

CHARACTERISTICS: products equipped with a 4.5 m charging cable. Possibility of connection via WiFi network, Ethernet cable, or 4G network.

EQUIPMENT: products equipped with a 7" color TFT graphic display and menu navigation buttons.

I-FAST MOVABLE

GW J9 811 W

30kW DC Movable charger

RFID APP

Code	No. of sockets	Power max.	Max output current	RFID Reader	Meter	Payment terminal	Pack Carton
GW J9 811 W	1	30 kW	CCS2: 80 A	Yes	Integrated DC Meter	No	1

CHARACTERISTICS: products equipped with a 4.5 m charging cable. Connectivity via WiFi, Ethernet cable or 4G network.

EQUIPMENT: products equipped with a 7" colour graphic TFT display and menu navigation buttons.

I-FAST COMPACT

GW J9 122 Y

60 kW Base DC Charging Station

RFID APP

Code	No. of sockets	Power max.	Max output current	RFID Reader	Meter	Payment terminal	Pack Carton
GW J9 122 Y	2	60 kW	CCS2: 150 A	Yes	Integrated DC Meter	No	1
GW J9 123 Y	1 + 1	60 kW	CCS2: 150 A - CHAdeMO: 120 A	Yes	Integrated DC Meter	No	1
GW J9 126 Y	1 + 1	60 kW	CCS2: 150 A - GBT: 120 A	Yes	Integrated DC Meter	No	1

CHARACTERISTICS: products equipped with a 4.5 m charging cable. Possibility of connection via WiFi network, Ethernet cable, or 4G network. They can simultaneously charge up to 2 electric vehicles.

EQUIPMENT: products equipped with a 7" color TFT graphic display and menu navigation buttons.

NOTES: versions with 7 m charging cables, payment terminal or DC certified energy meters, are available upon request.

GW J9 122 H

60 kW DC Charging Station, Eichrecht-compliant

RFID APP LOGISCHES EICHRECHT

Code	No. of sockets	Power max.	Max output current	RFID Reader	Meter	Payment terminal	Pack Carton
GW J9 122 H	2	60 kW	CCS2: 150 A	Yes	DC PTB Meter	No	1

CHARACTERISTICS: products equipped with a 4.5 m long charging cable. Possibility of connection via WiFi network, Ethernet cable or 4G network. They are capable of simultaneously charging up to 2 electric vehicles.

EQUIPMENT: products equipped with 7" color graphic TFT display and menu navigation buttons.

NOTES: a version with 7 m charging cable is available upon request.

I-FAST STATION

GW J9 232 Y

90-180 kW Base DC Charging Station

RFID APP

Code	No. of sockets	Power max.	Max output current	RFID Reader	Meter	Payment terminal	Pack Carton
Connector type: CCS2							
GW J9 232 Y	2	90 kW	CCS2: 250 A	Yes	Integrated DC Meter	No	1
GW J9 242 Y	2	120 kW	CCS2: 250 A	Yes	Integrated DC Meter	No	1
GW J9 252 Y	2	150 kW	CCS2: 250 A	Yes	Integrated DC Meter	No	1
GW J9 262 Y	2	180 kW	CCS2: 250 A	Yes	Integrated DC Meter	No	1
Connector type: CCS2 + CHAdeMO							
GW J9 233 Y	1 + 1	90 kW	CCS2: 250 A CHAdeMO: 120 A	Yes	Integrated DC Meter	No	1
GW J9 243 Y	1 + 1	120 kW	CCS2: 250 A CHAdeMO: 120 A	Yes	Integrated DC Meter	No	1
GW J9 253 Y	1 + 1	150 kW	CCS2: 250 A CHAdeMO: 120 A	Yes	Integrated DC Meter	No	1
GW J9 263 Y	1 + 1	180 kW	CCS2: 250 A CHAdeMO: 120 A	Yes	Integrated DC Meter	No	1
Connector type: CCS2 + GBT							
GW J9 236 Y	1 + 1	90 kW	CCS2: 250 A GBT: 120 A	Yes	Integrated DC Meter	No	1
GW J9 246 Y	1 + 1	120 kW	CCS2: 250 A GBT: 120 A	Yes	Integrated DC Meter	No	1
GW J9 256 Y	1 + 1	150 kW	CCS2: 250 A GBT: 120 A	Yes	Integrated DC Meter	No	1
GW J9 266 Y	1 + 1	180 kW	CCS2: 250 A GBT: 120 A	Yes	Integrated DC Meter	No	1

CHARACTERISTICS: products equipped with a 4.5 m charging cable. Possibility of connection via WiFi network, Ethernet cable, or 4G network. They can simultaneously charge up to 2 electric vehicles. The 90 kW, 120 kW, and 150 kW stations can be upgraded in terms of maximum power by adding 30 kW power modules (GWJ9902), reaching a maximum of 180 kW.

EQUIPMENT: products equipped with a 7" color TFT graphic display and menu navigation buttons.

NOTES: versions with 7 m or 9.5 m charging cables, payment terminal or DC certfied energy meters, are available upon request. For the 150 kW and 180 kW versions, CCS2 connectors with a maximum output current of 300 A (peak at 500 A) can also be requested.

GW J9 232 D

90-180 kW DC Charging Station, Eichrecht-compliant

RFID APP LOGISCHES EICHRECHT

Code	No. of sockets	Power max.	Max output current	RFID Reader	Meter	Payment terminal	Pack Carton
Connector type: CCS2							
GW J9 232 H	2	90 kW	CCS2: 250 A	Yes	DC PTB Meter	No	1
GW J9 242 H	2	120 kW	CCS2: 250 A	Yes	DC PTB Meter	No	1
GW J9 252 H	2	150 kW	CCS2: 250 A	Yes	DC PTB Meter	No	1
GW J9 262 H	2	180 kW	CCS2: 250 A	Yes	DC PTB Meter	No	1

CHARACTERISTICS: products equipped with a 4.5 m long charging cable. Possibility of connection via WiFi network, Ethernet cable or 4G network. They are capable of charging up to 2 electric vehicles simultaneously.

EQUIPMENT: products equipped with 7" color graphic TFT display and menu navigation buttons.

NOTES: versions with 7 m or 9.5 m charging cables are available upon request. For the 150 kW and 180 kW versions, CCS2 connectors with a maximum output current of 300 A (peak at 500 A) can also be requested.

I-FAST

I-FAST HPC COMPACT

GW J9 372 Y

240 kW Base DC Charging Station

Code	No. of sockets	Power max.	Max output current	Cable length	Meter	Payment terminal	Pack Carton
GW J9 372 Y	2	240 kW	CCS2: 300 A (peak 500 A)	4.5 m	Integrated DC Meter	No	1
GW J9 373 Y	1 + 1	240 kW	CCS2: 300 A (peak 500 A) CHAdeMO: 200 A	4.5 m	Integrated DC Meter	No	1

CHARACTERISTICS: products equipped with an RFID reader for charging authorization. Connectivity via WiFi, Ethernet cable or 4G network.

EQUIPMENT: products equipped with a 21" colour graphic TFT display with advertising management and menu navigation buttons.

NOTES: when configured with 7 m charging cables, the dedicated cable management system (GWJ9913) is recommended. A dual-4G version for connection to service back-end systems is available on request.

GW J9 372 H

240 kW DC Charging Station, Eichrecht-compliant

Code	No. of sockets	Power max.	Max output current	Cable length	Meter	Payment terminal	Pack Carton
GW J9 372 H	2	240 kW	CCS2: 300 A (peak 500 A)	4.5 m	DC PTB Meter	No	1

CHARACTERISTICS: products equipped with an RFID reader for charging authorization. Solution equipped with a PTB-certified DC energy meter and compliant with Eichrecht regulations. Connectivity via WiFi, Ethernet cable or 4G network.

EQUIPMENT: products equipped with a 21" colour graphic TFT display with advertising management and menu navigation buttons.

NOTES: when configured with 7 m charging cables, the dedicated cable management system (GWJ9913) is recommended. A dual-4G version for connection to service back-end systems is available on request.

I-FAST HPC STATION

GW J9 482 Y

320-480 kW Base DC Charging Station

Code	No. of sockets	Power max.	Max output current	Cable length	Meter	Payment terminal	Pack Carton
Connector type: 2 x CCS2 300 A							
GW J9 482 Y	2	320 kW	CCS2: 300 A (peak 500 A)	4.5 m	Integrated DC Meter	No	1
GW J9 492 Y	2	400 kW	CCS2: 300 A (peak 500 A)	4.5 m	Integrated DC Meter	No	1
GW J9 402 Y	2	480 kW	CCS2: 300 A (peak 500 A)	4.5 m	Integrated DC Meter	No	1

CHARACTERISTICS: products equipped with an RFID reader for charging authorization. Connectivity via WiFi, Ethernet cable or 4G network. Capable of simultaneously charging up to 2 or 4 electric vehicles. The 320 kW and 400 kW charging stations can be upgraded in terms of maximum power by adding 2 × 40 kW power modules (GWJ9903), reaching up to 480 kW.

EQUIPMENT: products equipped with a 7" colour graphic TFT display and menu navigation buttons.

NOTES: when configured with 7 m charging cables, the dedicated cable management system is recommended for 2 connectors (GWJ9914) or 4 connectors (GWJ9915). On request, versions with 7 m charging cables are available, including liquid-cooled CCS2 cable types (500 A), as well as a dual-4G version for connection to service back-end systems. An optional 21" advertising display can also be requested.

GW J9 482 H

320-480 kW DC Charging Station, Eichrecht-compliant

Code	No. of sockets	Power max.	Max output current	Cable length	Meter	Payment terminal	Pack Carton
Connector type: 2 x CCS2 300 A							
GW J9 482 H	2	320 kW	CCS2: 300A (peak 500A)	4.5 m	DC PTB Meter	No	1
GW J9 492 H	2	400 kW	CCS2: 300A (peak 500A)	4.5 m	DC PTB Meter	No	1
GW J9 402 H	2	480 kW	CCS2: 300A (peak 500A)	4.5 m	DC PTB Meter	No	1

CHARACTERISTICS: products equipped with an RFID reader for charging authorization. Solution equipped with a PTB-certified DC energy meter and compliant with Eichrecht regulations. Connectivity via WiFi, Ethernet cable or 4G network. Capable of simultaneously charging up to 2 or 4 electric vehicles.

EQUIPMENT: products equipped with a 7" colour graphic TFT display and menu navigation buttons.

NOTES: when configured with 7 m charging cables, the dedicated cable management system is recommended for 2 connectors (GWJ9914) or 4 connectors (GWJ9915). On request, versions with 7 m charging cables are available, including liquid-cooled CCS2 cable types (500 A), as well as a dual-4G version for connection to service back-end systems. An optional 21" advertising display can also be requested.

I-FAST

COMPLEMENTS FOR INSTALLATION

I-FAST accessories

GW J8 002

RFID charging authorization card

Code	Description	Suitable for	Pack Carton
GW J8 002	JOINON card to enable the charging process	All stations	1

GW J8 112

Communication system KIT

Code	Description	Suitable for	Pack Carton
GW J8 112	Micro SIM Data JOINON	All I-FAST stations	1

NOTES: the supplied SIM card is intended for use only within the 27 EU countries. For each data SIM card, different tariff plans can be activated according to the number of charging stations connected to the 4G modem.

GW J9 911

Complementary items for installation

Code	Description	Suitable for	Pack Carton
GW J9 902	30 kW AC-DC additional power conversion module	I-FAST STATION	1
GW J9 903	40 kW AC-DC additional power conversion module	I-FAST HPC STATION	1
GW J9 911	Upper support for charging cable	I-FAST COMPACT	1
GW J9 912	Upper support for charging cable	I-FAST STATION	1
GW J9 913	Upper support for charging cable	I-FAST HPC COMPACT	1
GW J9 914	Upper support for charging cable	I-FAST HPC STATION	1
GW J9 915	Upper support for charging cable - 4 Connectors	I-FAST HPC STATION	1
GW J9 923	Floor installation support	I-FAST WALLBOX	1
GW J9 921	Concrete floor fixing plate	I-FAST COMPACT	1
GW J9 922	Concrete floor fixing plate	I-FAST STATION	1
GW J9 924	Concrete floor fixing plate	I-FAST HPC COMPACT	1
GW J9 925	Concrete floor fixing plate	I-FAST HPC STATION	1

I-CORD

TYPE 2 CHARGING CABLES FOR ELECTRIC VEHICLES

Smooth charging cables

IP 55 IK 10 GWT 650°C 850°C

Single phase

GW J5 815 BL

Code	I max	Power max.	Voltage	Frequency	Cable length	Number of poles	Pack Carton
GW J5 815 BL	20 A	4.6 kW	230/250 V	50 - 60 Hz	5 m	L1 - N - PE - CC - CP	1
GW J5 818 BL	20 A	4.6 kW	230/250 V	50 - 60 Hz	8 m	L1 - N - PE - CC - CP	1
GW J5 815 CL	32 A	7.4 kW	230/250 V	50 - 60 Hz	5 m	L1 - N - PE - CC - CP	1
GW J5 818 CL	32 A	7.4 kW	230/250 V	50 - 60 Hz	8 m	L1 - N - PE - CC - CP	1

Three phase

GW J5 835 AL

Code	I max	Power max.	Voltage	Frequency	Cable length	Number of poles	Pack Carton
GW J5 835 AL	16 A	11 kW	380/480 V	50 - 60 Hz	5 m	L1/L2/L3 - N- PE - CC - CP	1
GW J5 838 AL	16 A	11 kW	380/480 V	50 - 60 Hz	8 m	L1/L2/L3 - N- PE - CC - CP	1
GW J5 835 CL	32 A	22 kW	380/480 V	50 - 60 Hz	5 m	L1/L2/L3 - N- PE - CC - CP	1
GW J5 838 CL	32 A	22 kW	380/480 V	50 - 60 Hz	8 m	L1/L2/L3 - N- PE - CC - CP	1

Spiral charging cables

IP 55 IK 10 GWT 650°C 850°C

Spiral

GW J5 814 CT

Code	I max	Power max.	Voltage	Frequency	Cable length	Number of poles	Pack Carton
GW J5 814 CT	32 A	7.4 kW	230/250 V	50 - 60 Hz	4 m	L1 - N - PE - CC - CP	1
GW J5 834 CT	32 A	22 kW	380/480 V	50 - 60 Hz	4 m	L1/L2/L3 - N- PE - CC - CP	1

Accessories for charging cables

Accessories

GW J5 913

Code	Description	Pack Carton
GW J5 913	Cable bag in waterproof fabric made from recycled material	10

Technical specifications

I-CON EVO

Wallboxes for residential scenarios

Code	GW J3 412 C	GW J3 413 C	GW J3 414 C	GW J3 402 C	GW J3 404 C
Charging mode	Mode 3	Mode 3	Mode 3	Mode 3	Mode 3
Charging sockets	Type 2	Type 2	Type 2	Type 2	Type 2
Connector type	Mobile connector	Mobile connector	Mobile connector	Fixed vandal-proof socket (IPxxD)	Fixed vandal-proof socket (IPxxD)
Cable length (if available)	5 m	5 m	5 m	-	-
Electrical specifications					
Power supply terminal block	3 x 10 mm^2	5 x 10 mm^2	5 x 10 mm^2	3 x 10 mm^2	5 x 10 mm^2
Rated voltage	230 V	400 V	400 V	230 V	400 V
Total maximum current	32 A	16 A	32 A	32 A	32 A
Maximum power	7.4 kW	11 kW	22 kW	7.4 kW	22 kW
User protection	DC Leakage 6 mA	DC Leakage 6 mA	DC Leakage 6 mA	DC Leakage 6 mA	DC Leakage 6 mA
Energy meter	Yes	Yes	Yes	Yes	Yes
Functional specifications					
Connectivity	WiFi	WiFi	WiFi	WiFi	WiFi
Communication	OCPP 1.6J	OCPP 1.6J	OCPP 1.6J	OCPP 1.6J	OCPP 1.6J
Load management	DLM with Solar Boost	DLM with Solar Boost	DLM with Solar Boost	DLM with Solar Boost	DLM with Solar Boost
Charging activation	Free / App	Free / App	Free / App	Free / App	Free / App
Human interface	LED	LED	LED	LED	LED
Master/Slave	-	-	-	-	-
Over The Air updates	Yes	Yes	Yes	Yes	Yes
Programmable remote contact	Yes	Yes	Yes	Yes	Yes
Local directives	-				
Mechanical specifications					
Installation type	Wall- / Flush- / Floor-mounting	Wall- / Flush- / Floor-mounting	Wall- / Flush- / Floor-mounting	Wall- / Flush- / Floor-mounting	Wall- / Flush- / Floor-mounting
Material	Thermoplastic	Thermoplastic	Thermoplastic	Thermoplastic	Thermoplastic
Protection rating	IP55	IP55	IP55	IP55	IP55
Impact resistance rating	IK11	IK11	IK11	IK11	IK11
Operating temperature	-25 °C / +55 °C	-25 °C / +55 °C	-25 °C / +55 °C	-25 °C / +55 °C	-25 °C / +55 °C
Available accessories					
DLM load management kit	Up to 100 A: GW J8 037 Single-phase / GW J8 038 Three-phase Over 100 A: GW D6 809 + GW D6 821 + C.T. (from GW 96 447 to GW 96 453)				
Flush-mounting box	GW J8 101				
Single-sided floor support	GW J8 102				
Double-sided floor support	GW J8 103				
Protective cover	GW J8 104				
Charging cable holder	GW J8 105				
Metal plate for wall mounting	GW J8 034				

Code	GW J3 402 CK	GW J3 404 CK	GW J3 402 CF	GW J3 404 CF
Charging mode	Mode 3	Mode 3	Mode 3	Mode 3
Charging sockets	Type 2	Type 2	Type 2	Type 2
Connector type	Fixed vandal-proof socket (IPxxD)	Fixed vandal-proof socket (IPxxD)	Fixed vandal-proof socket (IPxxD)	Fixed vandal-proof socket (IPxxD)
Cable length (if available)	-	-	-	-
Electrical specifications				
Power supply terminal block	3 x 16 mm^2	5 x 16 mm^2	3 x 10 mm^2	5 x 10 mm^2
Rated voltage	230 V	400 V	230 V	400 V
Total maximum current	32 A	32 A	32 A	32 A
Maximum power	7.4 kW	22 kW	7.4 kW	22 kW
User protection	DC Leakage 6 mA	DC Leakage 6 mA	DC Leakage 6 mA	DC Leakage 6 mA
Energy meter	Yes	Yes	Yes	Yes
Functional specifications				
Connectivity	WiFi	WiFi	WiFi	WiFi
Communication	OCPP 1.6J	OCPP 1.6J	OCPP 1.6J	OCPP 1.6J
Load management	DLM with Solar Boost	DLM with Solar Boost	DLM with Solar Boost	DLM with Solar Boost
Charging activation	Free / App	Free / App	Free / App	Free / App
Human interface	LED	LED	LED	LED
Master/Slave	-	-	-	-
Over The Air updates	Yes	Yes	Yes	Yes
Programmable remote contact	Yes	Yes	Yes	Yes
Local directives	PEN / OZEV		TIC	
Mechanical specifications				
Installation type	Wall- / Flush- / Floor-mounting	Wall- / Flush- / Floor-mounting	Wall- / Flush- / Floor-mounting	Wall- / Flush- / Floor-mounting
Material	Thermoplastic	Thermoplastic	Thermoplastic	Thermoplastic
Protection rating	IP55	IP55	IP55	IP55
Impact resistance rating	IK11	IK11	IK11	IK11
Operating temperature	-25 °C / +55 °C	-25 °C / +55 °C	-25 °C / +55 °C	-25 °C / +55 °C
Available accessories				
DLM load management kit	Up to 100 A: GW J8 037 Single-phase / GW J8 038 Three-phase Over 100 A: GW D6 809 + GW D6 821 + C.T. (from GW 96 447 to GW 96 453)			
Flush-mounting box	GW J8 101			
Single-sided floor support	GW J8 102			
Double-sided floor support	GW J8 103			
Protective cover	GW J8 104			
Charging cable holder	GW J8 105			
Metal plate for wall mounting	GW J8 034			

I-CON EVO

Wallboxes for complex residential/condominium scenarios

Code	GW J3 512 G	GW J3 513 G	GW J3 514 G	GW J3 502 G	GW J3 504 G
Charging mode	Mode 3	Mode 3	Mode 3	Mode 3	Mode 3
Charging sockets	Type 2	Type 2	Type 2	Type 2	Type 2
Connector type	Mobile connector	Mobile connector	Mobile connector	Fixed vandal-proof socket (IPxxD)	Fixed vandal-proof socket (IPxxD)
Cable length (if available)	5 m	5 m	5 m	-	-
Electrical specifications					
Power supply terminal block	3 x 16 mm^2	5 x 16 mm^2	5 x 16 mm^2	3 x 16 mm^2	5 x 16 mm^2
Rated voltage	230 V	400 V	400 V	230 V	400 V
Total maximum current	32 A	16 A	32 A	32 A	32 A
Maximum power	7.4 kW	11 kW	22 kW	7.4 kW	22 kW
User protection	DC Leakage 6 mA	DC Leakage 6 mA	DC Leakage 6 mA	DC Leakage 6 mA	DC Leakage 6 mA
Energy meter	Yes	Yes	Yes	Yes	Yes
Functional specifications					
Connectivity	WiFi / Ethernet	WiFi / Ethernet	WiFi / Ethernet	WiFi / Ethernet	WiFi / Ethernet
Communication	OCPP 1.6J	OCPP 1.6J	OCPP 1.6J	OCPP 1.6J	OCPP 1.6J
Load management	DLM with Solar Boost / via cloud with OCPP	DLM with Solar Boost / via cloud with OCPP	DLM with Solar Boost / via cloud with OCPP	DLM with Solar Boost / via cloud with OCPP	DLM with Solar Boost / via cloud with OCPP
Charging activation	App	App	App	App	App
Human interface	LED	LED	LED	LED	LED
Master/Slave	Yes	Yes	Yes	Yes	Yes
Over The Air updates	Yes	Yes	Yes	Yes	Yes
Programmable remote contact	Yes	Yes	Yes	Yes	Yes
Local directives	-				
Mechanical specifications					
Installation type	Wall- / Flush- / Floor-mounting	Wall- / Flush- / Floor-mounting	Wall- / Flush- / Floor-mounting	Wall- / Flush- / Floor-mounting	Wall- / Flush- / Floor-mounting
Material	Thermoplastic	Thermoplastic	Thermoplastic	Thermoplastic	Thermoplastic
Protection rating	IP55	IP55	IP55	IP55	IP55
Impact resistance rating	IK11	IK11	IK11	IK11	IK11
Operating temperature	-25 °C / +55 °C	-25 °C / +55 °C	-25 °C / +55 °C	-25 °C / +55 °C	-25 °C / +55 °C
Available accessories					
DLM load management kit	Up to 100 A: GW J8 037 Single-phase / GW J8 038 Three-phase Over 100 A: GW D6 809 + GW D6 821 + C.T. (from GW 96 447 to GW 96 453)				
Flush-mounting box	GW J8 101				
Single-sided floor support	GW J8 102				
Double-sided floor support	GW J8 103				
Protective cover	GW J8 104				
Charging cable holder	GW J8 105				
Metal plate for wall mounting	GW J8 034				
4G Modem kit	GW J8 111				

Code	GW J3 502 GK	GW J3 504 GK	GW J3 502 GF	GW J3 504 GF
Charging mode	Mode 3	Mode 3	Mode 3	Mode 3
Charging sockets	Type 2	Type 2	Type 2	Type 2
Connector type	Fixed vandal-proof socket (IPxxD)	Fixed vandal-proof socket (IPxxD)	Fixed vandal-proof socket (IPxxD)	Fixed vandal-proof socket (IPxxD)
Cable length (if available)	-	-	-	-
Electrical specifications				
Power supply terminal block	3 x 16 mm^2	5 x 16 mm^2	3 x 16 mm^2	5 x 16 mm^2
Rated voltage	230 V	400 V	230 V	400 V
Total maximum current	32 A	32 A	32 A	32 A
Maximum power	7.4 kW	22 kW	7.4 kW	22 kW
User protection	DC Leakage 6 mA	DC Leakage 6 mA	DC Leakage 6 mA	DC Leakage 6 mA
Energy meter	Yes	Yes	Yes	Yes
Functional specifications				
Connectivity	WiFi / Ethernet	WiFi / Ethernet	WiFi / Ethernet	WiFi / Ethernet
Communication	OCPP 1.6J	OCPP 1.6J	OCPP 1.6J	OCPP 1.6J
Load management	DLM with Solar Boost / via cloud with OCPP	DLM with Solar Boost / via cloud with OCPP	DLM with Solar Boost / via cloud with OCPP	DLM with Solar Boost / via cloud with OCPP
Charging activation	App	App	App	App
Human interface	LED	LED	LED	LED
Master/Slave	Yes	Yes	Yes	Yes
Over The Air updates	Yes	Yes	Yes	Yes
Programmable remote contact	Yes	Yes	Yes	Yes
Local directives	PEN / OZEV		TIC	
Mechanical specifications				
Installation type	Wall- / Flush- / Floor-mounting	Wall- / Flush- / Floor-mounting	Wall- / Flush- / Floor-mounting	Wall- / Flush- / Floor-mounting
Material	Thermoplastic	Thermoplastic	Thermoplastic	Thermoplastic
Protection rating	IP55	IP55	IP55	IP55
Impact resistance rating	IK11	IK11	IK11	IK11
Operating temperature	-25 °C / +55 °C	-25 °C / +55 °C	-25 °C / +55 °C	-25 °C / +55 °C
Available accessories				
DLM load management kit	Up to 100 A: GW J8 037 Single-phase / GW J8 038 Three-phase Over 100 A: GW D6 809 + GW D6 821 + C.T. (from GW 96 447 to GW 96 453)			
Flush-mounting box	GW J8 101			
Single-sided floor support	GW J8 102			
Double-sided floor support	GW J8 103			
Protective cover	GW J8 104			
Charging cable holder	GW J8 105			
Metal plate for wall mounting	GW J8 034			
4G Modem kit	GW J8 111			

I-CON EVO

Wallboxes for corporate scenarios

Code	GW J3 612 T	GW J3 613 T	GW J3 614 T	GW J3 602 T	GW J3 603 T	GW J3 604 T
Charging mode	Mode 3	Mode 3	Mode 3	Mode 3	Mode 3	Mode 3
Charging sockets	Type 2	Type 2	Type 2	Type 2	Type 2	Type 2
Connector type	Mobile connector	Mobile connector	Mobile connector	Fixed vandal-proof socket (IPxxD)	Fixed vandal-proof socket (IPxxD)	Fixed vandal-proof socket (IPxxD)
Cable length (if available)	5 m	5 m	5 m	-	-	-
Electrical specifications						
Power supply terminal block	3 x 16 mm^2	5 x 16 mm^2	5 x 16 mm^2	3 x 16 mm^2	5 x 16 mm^2	5 x 16 mm^2
Rated voltage	230 V	400 V	400 V	230 V	400 V	400 V
Total maximum current	32 A	16 A	32 A	32 A	16 A	32 A
Maximum power	7.4 kW	11 kW	22 kW	7.4 kW	11 kW	22 kW
User protection	DC Leakage 6 mA	DC Leakage 6 mA	DC Leakage 6 mA	DC Leakage 6 mA	DC Leakage 6 mA	DC Leakage 6 mA
Energy meter	Yes	Yes	Yes	Yes	Yes	Yes
Functional specifications						
Connectivity	WiFi / Ethernet	WiFi / Ethernet	WiFi / Ethernet	WiFi / Ethernet	WiFi / Ethernet	WiFi / Ethernet
Communication	OCPP 1.6J	OCPP 1.6J	OCPP 1.6J	OCPP 1.6J	OCPP 1.6J	OCPP 1.6J
Load management	DLM with Solar Boost / via cloud with OCPP	DLM with Solar Boost / via cloud with OCPP	DLM with Solar Boost / via cloud with OCPP	DLM with Solar Boost / via cloud with OCPP	DLM with Solar Boost / via cloud with OCPP	DLM with Solar Boost / via cloud with OCPP
Charging activation	App / RFID	App / RFID	App / RFID	App / RFID	App / RFID	App / RFID
Human interface	LED	LED	LED	LED	LED	LED
Master/Slave	Yes	Yes	Yes	Yes	Yes	Yes
Over The Air updates	Yes	Yes	Yes	Yes	Yes	Yes
Programmable remote contact	Yes	Yes	Yes	Yes	Yes	Yes
Local directives	-					
Mechanical specifications						
Installation type	Wall- / Flush- / Floor-mounting	Wall- / Flush- / Floor-mounting	Wall- / Flush- / Floor-mounting	Wall- / Flush- / Floor-mounting	Wall- / Flush- / Floor-mounting	Wall- / Flush- / Floor-mounting
Material	Thermoplastic	Thermoplastic	Thermoplastic	Thermoplastic	Thermoplastic	Thermoplastic
Protection rating	IP55	IP55	IP55	IP55	IP55	IP55
Impact resistance rating	IK11	IK11	IK11	IK11	IK11	IK11
Operating temperature	-25 °C / +55 °C	-25 °C / +55 °C	-25 °C / +55 °C	-25 °C / +55 °C	-25 °C / +55 °C	-25 °C / +55 °C
Available accessories						
DLM load management kit	Up to 100 A: GW J8 037 Single-phase / GW J8 038 Three-phase Over 100 A: GW D6 809 + GW D6 821 + C.T. (from GW 96 447 to GW 96 453)					
Flush-mounting box	GW J8 101					
Single-sided floor support	GW J8 102					
Double-sided floor support	GW J8 103					
Protective cover	GW J8 104					
Charging cable holder	GW J8 105					
Metal plate for wall mounting	GW J8 034					
RFID card	GW J8 002					
4G Modem kit	GW J8 111					

Code	GW J3 602 TK	GW J3 604 TK
Charging mode	Mode 3	Mode 3
Charging sockets	Type 2	Type 2
Connector type	Fixed vandal-proof socket (IPxxD)	Fixed vandal-proof socket (IPxxD)
Cable length (if available)	-	-
Electrical specifications		
Power supply terminal block	3 x 16 mm^2	5 x 16 mm^2
Rated voltage	230 V	400 V
Total maximum current	32 A	32 A
Maximum power	7.4 kW	22 kW
User protection	DC Leakage 6 mA	DC Leakage 6 mA
Energy meter	Yes	Yes
Functional specifications		
Connectivity	WiFi / Ethernet	WiFi / Ethernet
Communication	OCPP 1.6J	OCPP 1.6J
Load management	DLM with Solar Boost / via cloud with OCPP	DLM with Solar Boost / via cloud with OCPP
Charging activation	App / RFID	App / RFID
Human interface	LED	LED
Master/Slave	Yes	Yes
Over The Air updates	Yes	Yes
Programmable remote contact	Yes	Yes
Local directives	PEN / OZEV	
Mechanical specifications		
Installation type	Wall- / Flush- / Floor-mounting	Wall- / Flush- / Floor-mounting
Material	Thermoplastic	Thermoplastic
Protection rating	IP55	IP55
Impact resistance rating	IK11	IK11
Operating temperature	-25 °C / +55 °C	-25 °C / +55 °C
Available accessories		
DLM load management kit	Up to 100 A: GW J8 037 Single-phase / GW J8 038 Three-phase Over 100 A: GW D6 809 + GW D6 821 + C.T. (from GW 96 447 to GW 96 453)	
Flush-mounting box	GW J8 101	
Single-sided floor support	GW J8 102	
Double-sided floor support	GW J8 103	
Protective cover	GW J8 104	
Charging cable holder	GW J8 105	
Metal plate for wall mounting	GW J8 034	
RFID card	GW J8 002	
4G Modem kit	GW J8 111	

I-CON EVO

Wallboxes for semi-public scenarios

Code	GW J3 712 T	GW J3 714 T	GW J3 702 T	GW J3 704 T
Charging mode	Mode 3	Mode 3	Mode 3	Mode 3
Charging sockets	Type 2	Type 2	Type 2	Type 2
Connector type	Mobile connector	Mobile connector	Fixed vandal-proof socket (IPxxD)	Fixed vandal-proof socket (IPxxD)
Cable length (if available)	5 m	5 m	-	-
Electrical specifications				
Power supply terminal block	3 x 16 mm^2	5 x 16 mm^2	3 x 16 mm^2	5 x 16 mm^2
Rated voltage	230 V	400 V	230 V	400 V
Total maximum current	32 A	32 A	32 A	32 A
Maximum power	7.4 kW	22 kW	7.4 kW	22 kW
User protection	DC Leakage 6 mA	DC Leakage 6 mA	DC Leakage 6 mA	DC Leakage 6 mA
Energy meter	Yes, MID type	Yes, MID type	Yes, MID type	Yes, MID type
Functional specifications				
Connectivity	WiFi / Ethernet	WiFi / Ethernet	WiFi / Ethernet	WiFi / Ethernet
Communication	OCPP 1.6J	OCPP 1.6J	OCPP 1.6J	OCPP 1.6J
Load management	DLM with Solar Boost / via cloud with OCPP	DLM with Solar Boost / via cloud with OCPP	DLM with Solar Boost / via cloud with OCPP	DLM with Solar Boost / via cloud with OCPP
Charging activation	App / RFID	App / RFID	App / RFID	App / RFID
Human interface	LED	LED	LED	LED
Master/Slave	Yes	Yes	Yes	Yes
Over The Air updates	Yes	Yes	Yes	Yes
Programmable remote contact	Yes	Yes	Yes	Yes
Local directives	-			
Mechanical specifications				
Installation type	Wall- / Flush- / Floor-mounting	Wall- / Flush- / Floor-mounting	Wall- / Flush- / Floor-mounting	Wall- / Flush- / Floor-mounting
Material	Thermoplastic	Thermoplastic	Thermoplastic	Thermoplastic
Protection rating	IP55	IP55	IP55	IP55
Impact resistance rating	IK11	IK11	IK11	IK11
Operating temperature	-25 °C / +55 °C	-25 °C / +55 °C	-25 °C / +55 °C	-25 °C / +55 °C
Available accessories				
DLM load management kit	Up to 100 A: GW J8 037 Single-phase / GW J8 038 Three-phase Over 100 A: GW D6 809 + GW D6 821 + C.T. (from GW 96 447 to GW 96 453)			
Flush-mounting box	GW J8 101			
Single-sided floor support	GW J8 102			
Double-sided floor support	GW J8 103			
Protective cover	GW J8 104			
Charging cable holder	GW J8 105			
Metal plate for wall mounting	GW J8 034			
RFID card	GW J8 002			
4G Modem kit	GW J8 111			

Code	GW J3 704 TK	GW J3 702 TF	GW J3 704 TF
Charging mode	Mode 3	Mode 3	Mode 3
Charging sockets	Type 2	Type 2	Type 2
Connector type	Fixed vandal-proof socket (IPxxD)	Fixed vandal-proof socket (IPxxD)	Fixed vandal-proof socket (IPxxD)
Cable length (if available)	-	-	-
Electrical specifications			
Power supply terminal block	5 x 16 mm^2	3 x 16 mm^2	5 x 16 mm^2
Rated voltage	400 V	230 V	400 V
Total maximum current	32 A	32 A	32 A
Maximum power	22 kW	7.4 kW	22 kW
User protection	DC Leakage 6 mA	DC Leakage 6 mA	DC Leakage 6 mA
Energy meter	Yes, MID type	Yes, MID type	Yes, MID type
Functional specifications			
Connectivity	WiFi / Ethernet	WiFi / Ethernet	WiFi / Ethernet
Communication	OCPP 1.6J	OCPP 1.6J	OCPP 1.6J
Load management	DLM with Solar Boost / via cloud with OCPP	DLM with Solar Boost / via cloud with OCPP	DLM with Solar Boost / via cloud with OCPP
Charging activation	App / RFID	App / RFID	App / RFID
Human interface	LED	LED	LED
Master/Slave	Yes	Yes	Yes
Over The Air updates	Yes	Yes	Yes
Programmable remote contact	Yes	Yes	Yes
Local directives	PEN / OZEV	TIC	
Mechanical specifications			
Installation type	Wall- / Flush- / Floor-mounting	Wall- / Flush- / Floor-mounting	Wall- / Flush- / Floor-mounting
Material	Thermoplastic	Thermoplastic	Thermoplastic
Protection rating	IP55	IP55	IP55
Impact resistance rating	IK11	IK11	IK11
Operating temperature	-25 °C / +55 °C	-25 °C / +55 °C	-25 °C / +55 °C
Available accessories			
DLM load management kit	Up to 100 A: GW J8 037 Single-phase / GW J8 038 Three-phase Over 100 A: GW D6 809 + GW D6 821 + C.T. (from GW 96 447 to GW 96 453)		
Flush-mounting box	GW J8 101		
Single-sided floor support	GW J8 102		
Double-sided floor support	GW J8 103		
Protective cover	GW J8 104		
Charging cable holder	GW J8 105		
Metal plate for wall mounting	GW J8 034		
RFID card	GW J8 002		
4G Modem kit	GW J8 111		

I-CON EVO

WITH MOBILE CONNECTOR

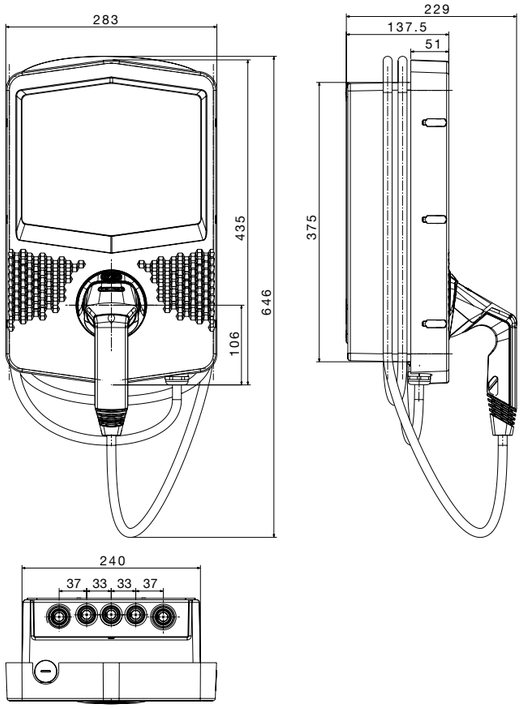

WITH FIXED SOCKET

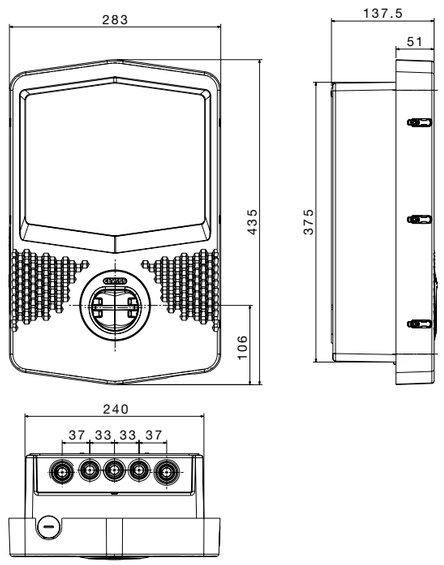

I-CON EVO ACCESSORIES

FLOOR SUPPORT - SINGLE-SIDED

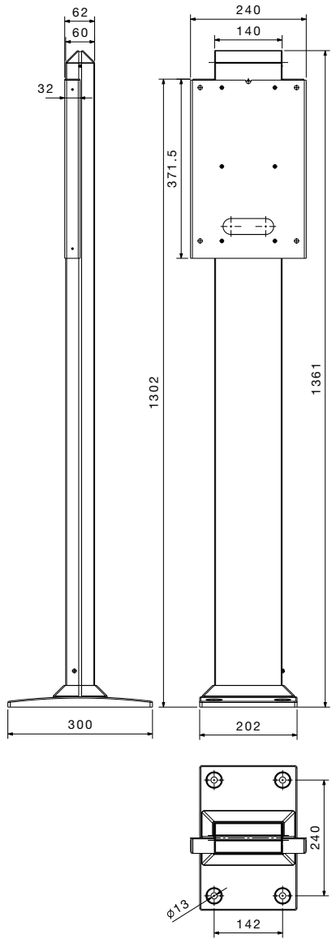

GW J8 102

FLOOR SUPPORT - DOUBLE-SIDED

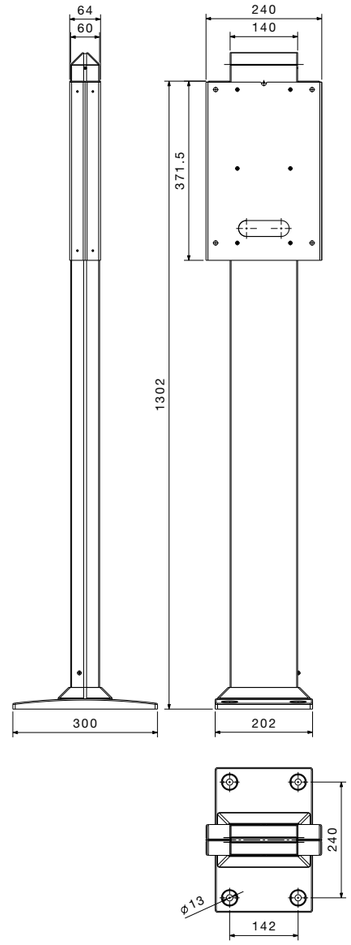

GW J8 103

I-CON EVO ACCESSORIES

PROTECTION SUPPORT

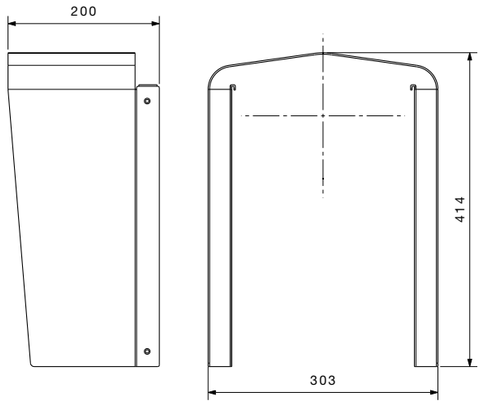

GW J8 104

FLUSH-MOUNTING BOX

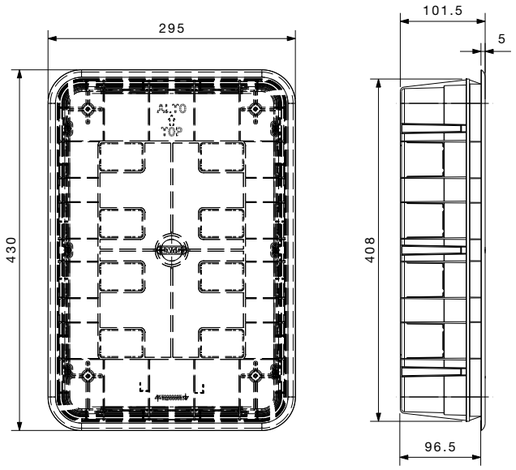

GW J8 101

BACKEND CONNECTION SCHEME

EXAMPLE 1

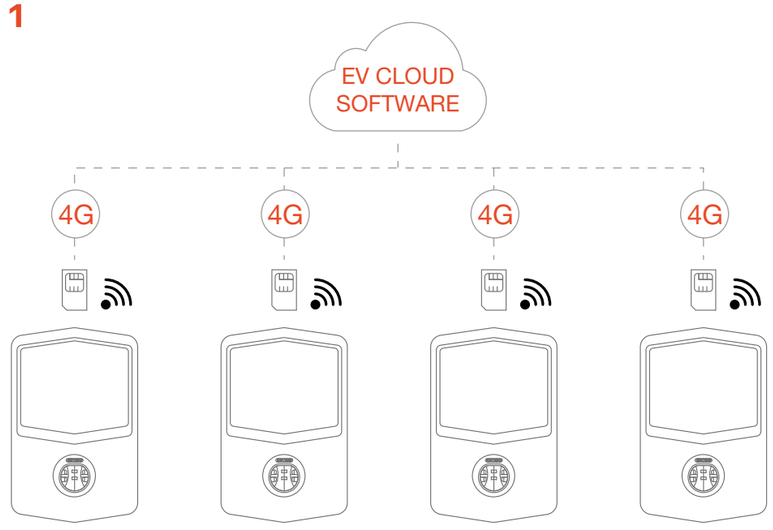

The charging stations can be equipped with a 4G Modem kit and communicate "Peer To Peer" with the communication backend via the OCPP 1.6 JSON protocol.

EXAMPLE 2

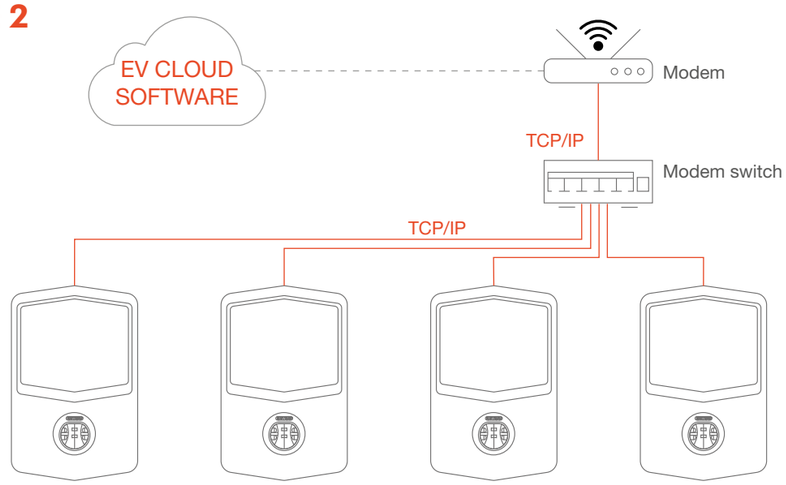

The charging stations that include controlled access have Ethernet ports and can be wired to a switch in a star topology. Connectivity takes place through a Router available in the system.

I-ON EVO

Columns for corporate scenarios

Code	GW J1 402 T	GW J1 403 T	GW J1 404 T	GW J1 412 T	GW J1 414 T
Charging mode	Mode 3	Mode 3	Mode 3	Mode 3	Mode 3
Charging sockets	Type 2	Type 2	Type 2	Type 2	Type 2
Connector type	Fixed vandal-proof socket (IPxxD)	Fixed vandal-proof socket (IPxxD)	Fixed vandal-proof socket (IPxxD)	Mobile connector	Mobile connector
Cable length (if available)	-	-	-	4 m spiral	4 m spiral
Electrical specifications					
Input					
Power supply (in-out)	3 x 70 mm²	5 x 70 mm²	5 x 70 mm²	3 x 70 mm²	5 x 70 mm²
Rated current	64 A	32 A	64 A	64 A	64 A
Total power	14.8 kW	22 kW	44 kW	14.8 kW	44 kW
Output					
Rated voltage	230 V	400 V	400 V	230 V	400 V
Total maximum current	32 A + 32 A	16 A + 16 A	32 A + 32 A	32 A + 32 A	32 A + 32 A
Maximum power	7.4 kW + 7.4 kW	11 kW + 11 kW	22 kW + 22 kW	7.4 kW + 7.4 kW	22 kW + 22 kW
Magnetothermal protection	40 A - 2P - D Curve	20 A - 4P - D Curve	40 A - 4P - D Curve	40 A - 2P - D Curve	40 A - 4P - D Curve
Differential protection	40 A - 2P - Type A	20 A - 4P - Type A	40 A - 4P - Type A	40 A - 2P - Type A	40 A - 4P - Type A
User protection	DC Leakage 6 mA	DC Leakage 6 mA	DC Leakage 6 mA	DC Leakage 6 mA	DC Leakage 6 mA
Energy meter	Yes	Yes	Yes	Yes	Yes
Functional specifications					
Connectivity	WiFi / Ethernet	WiFi / Ethernet	WiFi / Ethernet	WiFi / Ethernet	WiFi / Ethernet
Communication	OCPP 1.6J	OCPP 1.6J	OCPP 1.6J	OCPP 1.6J	OCPP 1.6J
Load management	DLM with Solar Boost / via cloud with OCPP	DLM with Solar Boost / via cloud with OCPP	DLM with Solar Boost / via cloud with OCPP	DLM with Solar Boost / via cloud with OCPP	DLM with Solar Boost / via cloud with OCPP
Charging activation	App / RFID	App / RFID	App / RFID	App / RFID	App / RFID
Human interface	4.3” graphic display	4.3” graphic display	4.3” graphic display	4.3” graphic display	4.3” graphic display
Master/Slave	Yes	Yes	Yes	Yes	Yes
Over The Air updates	Yes	Yes	Yes	Yes	Yes
Programmable remote contact	Yes	Yes	Yes	Yes	Yes
Local directives	-				
Mechanical specifications					
Installation type	Floor-mounting (fixing base already included)				
Material	Steel sheet				
Exterior colour	Grey Chassis, Cap RAL 7016				
Surface treatment	Anti-corrosion surface painting				
Protection rating	IP55				
Impact resistance rating	IK11				
Operating temperature	-25 °C / +55 °C				
Available accessories					
DLM load management kit	Up to 100 A: GW J8 037 Single-phase / GW J8 038 Three-phase Over 100 A: GW D6 809 + GW D6 821 + C.T. (from GW 96 447 to GW 96 453)				
Floor mounting plate	GW J8 021				
RFID card	GW J8 002				
4G Modem kit	GW J8 013				

I-ON EVO

Columns for semi-public or public scenarios

Code	GW J1 502 T	GW J1 504 T	GW J1 514 T
Charging mode	Mode 3	Mode 3	Mode 3
Charging sockets	Type 2	Type 2	Type 2
Connector type	Fixed vandal-proof socket (IPxxD)	Fixed vandal-proof socket (IPxxD)	Mobile connector
Cable length (if available)	-	-	4 m spiral
Electrical specifications			
Input			
Power supply (in-out)	3 x 70 mm²	5 x 70 mm²	5 x 70 mm²
Rated current	64 A	64 A	64 A
Total power	14.8 kW	44 kW	44 kW
Output			
Rated voltage	230 V	400 V	400 V
Total maximum current	32 A + 32 A	32 A + 32 A	32 A + 32 A
Maximum power	7.4 kW + 7.4 kW	22 kW + 22 kW	22 kW + 22 kW
Magnetothermal protection	40 A - 2P - D Curve	40 A - 4P - D Curve	40 A - 4P - D Curve
Differential protection	40 A - 2P - Type A	40 A - 4P - Type A	40 A - 4P - Type A
User protection	DC Leakage 6 mA	DC Leakage 6 mA	DC Leakage 6 mA
Energy meter	Yes, MID type	Yes, MID type	Yes, MID type
Functional specifications			
Connectivity	WiFi / Ethernet	WiFi / Ethernet	WiFi / Ethernet
Communication	OCPP 1.6J	OCPP 1.6J	OCPP 1.6J
Load management	DLM with Solar Boost / via cloud with OCPP	DLM with Solar Boost / via cloud with OCPP	DLM with Solar Boost / via cloud with OCPP
Charging activation	App / RFID	App / RFID	App / RFID
Human interface	4.3” graphic display	4.3” graphic display	4.3” graphic display
Master/Slave	Yes	Yes	Yes
Over The Air updates	Yes	Yes	Yes
Programmable remote contact	Yes	Yes	Yes
Local directives	-		
Mechanical specifications			
Installation type	Floor-mounting (fixing base already included)		
Material	Steel sheet		
Exterior colour	Grey Chassis, Cap RAL 7016		
Surface treatment	Anti-corrosion surface painting		
Protection rating	IP55		
Impact resistance rating	IK11		
Operating temperature	-25 °C / +55 °C		
Available accessories			
DLM load management kit	Up to 100 A: GW J8 037 Single-phase / GW J8 038 Three-phase Over 100 A: GW D6 809 + GW D6 821 + C.T. (from GW 96 447 to GW 96 453)		
Floor mounting plate	GW J8 021		
RFID card	GW J8 002		
4G Modem kit	GW J8 013		

I-ON EVO

Columns for semi-public or public scenarios

Code	GW J1 502 TK	GW J1 504 TK	GW J1 502 TF	GW J1 504 TF
Charging mode	Mode 3	Mode 3	Mode 3	Mode 3
Charging sockets	Type 2	Type 2	Type 2	Type 2
Connector type	Fixed vandal-proof socket (IPxxD)	Fixed vandal-proof socket (IPxxD)	Fixed vandal-proof socket (IPxxD)	Fixed vandal-proof socket (IPxxD)
Cable length (if available)	-	-	-	-
Electrical specifications				
Input				
Power supply (in-out)	3 x 70 mm²	5 x 70 mm²	3 x 70 mm²	5 x 70 mm²
Rated current	64 A	64 A	64 A	64 A
Total power	14.8 kW	44 kW	14.8 kW	44 kW
Output				
Rated voltage	230 V	400 V	230 V	400 V
Total maximum current	32 A + 32 A	32 A + 32 A	32 A + 32 A	32 A + 32 A
Maximum power	7.4 kW + 7.4 kW	22 kW + 22 kW	7.4 kW + 7.4 kW	22 kW + 22 kW
Magnetothermal protection	40 A - 2P - D Curve	40 A - 4P - D Curve	40 A - 2P - D Curve	40 A - 4P - D Curve
Differential protection	40 A - 2P - Type A	40 A - 4P - Type A	40 A - 2P - Type A	40 A - 4P - Type A
User protection	DC Leakage 6 mA	DC Leakage 6 mA	DC Leakage 6 mA	DC Leakage 6 mA
Energy meter	Yes, MID type	Yes, MID type	Yes, MID type	Yes, MID type
Functional specifications				
Connectivity	WiFi / Ethernet	WiFi / Ethernet	WiFi / Ethernet	WiFi / Ethernet
Communication	OCPP 1.6J	OCPP 1.6J	OCPP 1.6J	OCPP 1.6J
Load management	DLM with Solar Boost / via cloud with OCPP	DLM with Solar Boost / via cloud with OCPP	DLM with Solar Boost / via cloud with OCPP	DLM with Solar Boost / via cloud with OCPP
Charging activation	App / RFID	App / RFID	App / RFID	App / RFID
Human interface	4.3” graphic display	4.3” graphic display	4.3” graphic display	4.3” graphic display
Master/Slave	Yes	Yes	Yes	Yes
Over The Air updates	Yes	Yes	Yes	Yes
Programmable remote contact	Yes	Yes	Yes	Yes
Local directives	PEN / OZEV		TIC	
Mechanical specifications				
Installation type	Floor-mounting (fixing base already included)			
Material	Steel sheet			
Exterior colour	Grey Chassis, Cap RAL 7016			
Surface treatment	Anti-corrosion surface painting			
Protection rating	IP55			
Impact resistance rating	IK11			
Operating temperature	-25 °C / +55 °C			
Available accessories				
DLM load management kit	Up to 100 A: GW J8 037 Single-phase / GW J8 038 Three-phase Over 100 A: GW D6 809 + GW D6 821 + C.T. (from GW 96 447 to GW 96 453)			
Floor mounting plate	GW J8 021			
RFID card	GW J8 002			
4G Modem kit	GW J8 013			

I-ON EVO

Wallboxes for corporate scenarios

Code	GW J2 402 T	GW J2 404 T
Charging mode	Mode 3	Mode 3
Charging sockets	Type 2	Type 2
Connector type	Fixed vandal-proof socket (IPxxD)	Fixed vandal-proof socket (IPxxD)
Cable length (if available)	-	-
Electrical specifications		
Input		
Power supply (in-out)	3 x 70 mm²	5 x 70 mm²
Rated current	64 A	64 A
Total power	14.8 kW	44 kW
Output		
Rated voltage	230 V	400 V
Total maximum current	32 A + 32 A	32 A + 32 A
Maximum power	7.4 kW + 7.4 kW	22 kW + 22 kW
Magnetothermal protection	40 A - 2P - D Curve	40 A - 4P - D Curve
Differential protection	40 A - 2P - Type A	40 A - 4P - Type A
User protection	DC Leakage 6 mA	DC Leakage 6 mA
Energy meter	Yes	Yes
Functional specifications		
Connectivity	WiFi / Ethernet	WiFi / Ethernet
Communication	OCPP 1.6J	OCPP 1.6J
Load management	DLM with Solar Boost / via cloud with OCPP	DLM with Solar Boost / via cloud with OCPP
Charging activation	App / RFID	App / RFID
Human interface	4.3” graphic display	4.3” graphic display
Master/Slave	Yes	Yes
Over The Air updates	Yes	Yes
Programmable remote contact	Yes	Yes
Local directives	-	
Mechanical specifications		
Installation type	Wall- / Pole-mounting	
Material	Steel sheet	
Exterior colour	Grey Chassis, Cap RAL 7016	
Surface treatment	Anti-corrosion surface painting	
Protection rating	IP55	
Impact resistance rating	IK10	
Operating temperature	-25 °C / +55 °C	
Available accessories		
DLM load management kit	Up to 100 A: GW J8 037 Single-phase / GW J8 038 Three-phase Over 100 A: GW D6 809 + GW D6 821 + C.T. (from GW 96 447 to GW 96 453)	
Pole support kit	GW 46 551	
RFID card	GW J8 002	
4G Modem kit	GW J8 013	

I-ON EVO

Wallboxes for semi-public or public scenarios

Code	GW J2 502 T	GW J2 504 T	GW J2 502 TK	GW J2 504 TK	GW J2 502 TF	GW J2 504 TF
Charging mode	Mode 3	Mode 3	Mode 3	Mode 3	Mode 3	Mode 3
Charging sockets	Type 2	Type 2	Type 2	Type 2	Type 2	Type 2
Connector type	Fixed vandal-proof socket (IPxxD)	Fixed vandal-proof socket (IPxxD)	Fixed vandal-proof socket (IPxxD)	Fixed vandal-proof socket (IPxxD)	Fixed vandal-proof socket (IPxxD)	Fixed vandal-proof socket (IPxxD)
Cable length (if available)	-	-	-	-	-	-
Electrical specifications						
Input						
Power supply (in-out)	3 x 70 mm²	5 x 70 mm²	3 x 70 mm²	5 x 70 mm²	3 x 70 mm²	5 x 70 mm²
Rated current	64 A	64 A	64 A	64 A	64 A	64 A
Total power	14.8 kW	44 kW	14.8 kW	44 kW	14.8 kW	44 kW
Output						
Rated voltage	230 V	400 V	230 V	400 V	230 V	400 V
Total maximum current	32 A + 32 A	32 A + 32 A	32 A + 32 A	32 A + 32 A	32 A + 32 A	32 A + 32 A
Maximum power	7.4 kW + 7.4 kW	22 kW + 22 kW	7.4 kW + 7.4 kW	22 kW + 22 kW	7.4 kW + 7.4 kW	22 kW + 22 kW
Magnetothermal protection	40 A - 2P - D Curve	40 A - 4P - D Curve	40 A - 2P - D Curve	40 A - 4P - D Curve	40 A - 2P - D Curve	40 A - 4P - D Curve
Differential protection	40 A - 2P - Type A	40 A - 4P - Type A	40 A - 2P - Type A	40 A - 4P - Type A	40 A - 2P - Type A	40 A - 4P - Type A
User protection	DC Leakage 6 mA	DC Leakage 6 mA	DC Leakage 6 mA	DC Leakage 6 mA	DC Leakage 6 mA	DC Leakage 6 mA
Energy meter	Yes, MID type	Yes, MID type	Yes, MID type	Yes, MID type	Yes, MID type	Yes, MID type
Functional specifications						
Connectivity	WiFi / Ethernet	WiFi / Ethernet	WiFi / Ethernet	WiFi / Ethernet	WiFi / Ethernet	WiFi / Ethernet
Communication	OCPP 1.6J	OCPP 1.6J	OCPP 1.6J	OCPP 1.6J	OCPP 1.6J	OCPP 1.6J
Load management	DLM with Solar Boost / via cloud with OCPP	DLM with Solar Boost / via cloud with OCPP	DLM with Solar Boost / via cloud with OCPP	DLM with Solar Boost / via cloud with OCPP	DLM with Solar Boost / via cloud with OCPP	DLM with Solar Boost / via cloud with OCPP
Charging activation	App / RFID	App / RFID	App / RFID	App / RFID	App / RFID	App / RFID
Human interface	4.3” graphic display	4.3” graphic display	4.3” graphic display	4.3” graphic display	4.3” graphic display	4.3” graphic display
Master/Slave	Yes	Yes	Yes	Yes	Yes	Yes
Over The Air updates	Yes	Yes	Yes	Yes	Yes	Yes
Programmable remote contact	Yes	Yes	Yes	Yes	Yes	Yes
Local directives	-		PEN / OZEV		TIC	
Mechanical specifications						
Installation type	Wall- / Pole-mounting					
Material	Steel sheet					
Exterior colour	Grey Chassis, Cap RAL 7016					
Surface treatment	Anti-corrosion surface painting					
Protection rating	IP55					
Impact resistance rating	IK10					
Operating temperature	-25 °C / +55 °C					
Available accessories						
DLM load management kit	Up to 100 A: GW J8 037 Single-phase / GW J8 038 Three-phase Over 100 A: GW D6 809 + GW D6 821 + C.T. (from GW 96 447 to GW 96 453)					
Pole support kit	GW 46 551					
RFID card	GW J8 002					
4G Modem kit	GW J8 013					

I-ON EVO

COLUMN

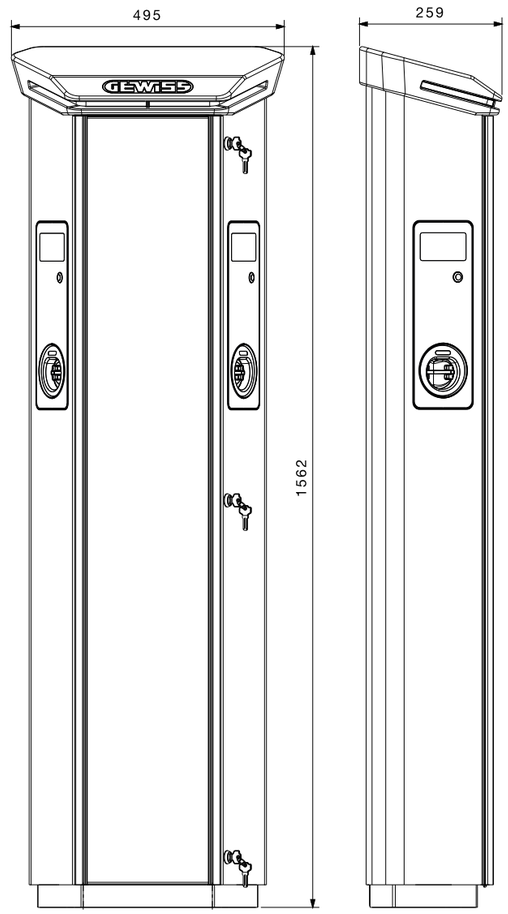

WALLBOX

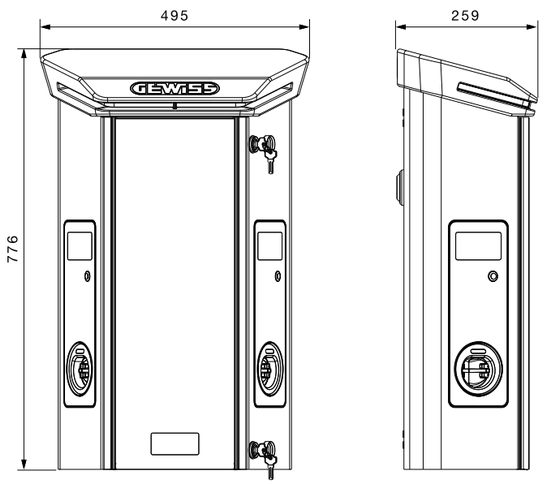

BACKEND CONNECTION SCHEME

EXAMPLE 1

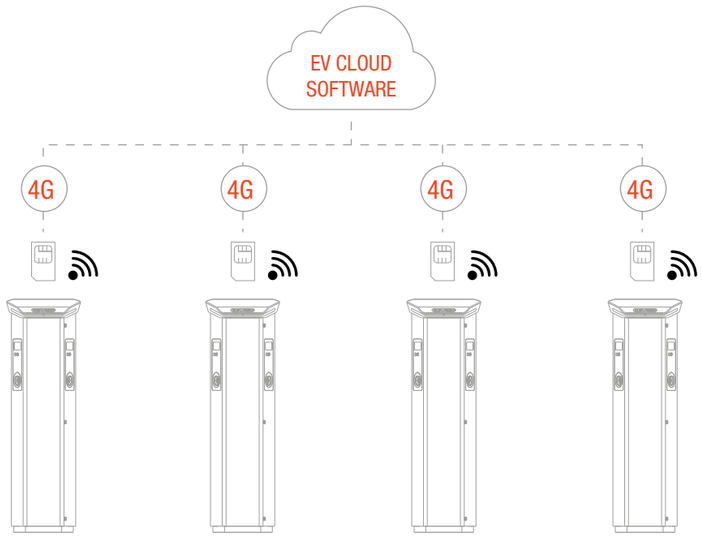

The charging stations can be equipped with a 4G Modem kit and communicate "Peer To Peer" with the communication backend via the OCPP 1.6 JSON protocol.

EXAMPLE 2

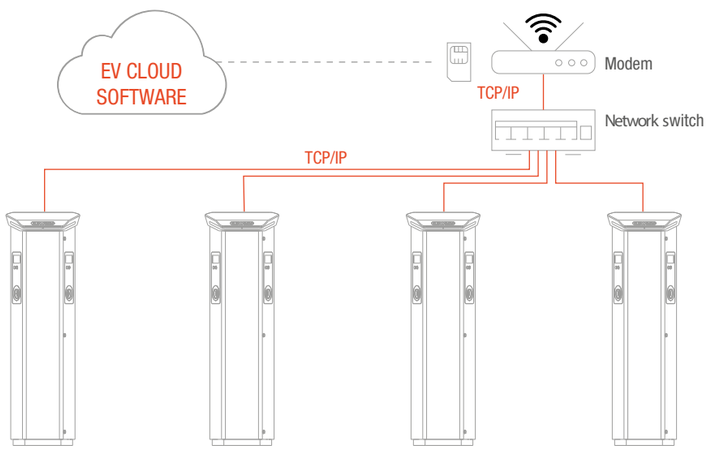

The charging stations are all equipped with Ethernet ports and can be wired to a switch in a star topology. Connectivity takes place through a Router available in the system.

EXAMPLE 3 (MASTER / SLAVE)

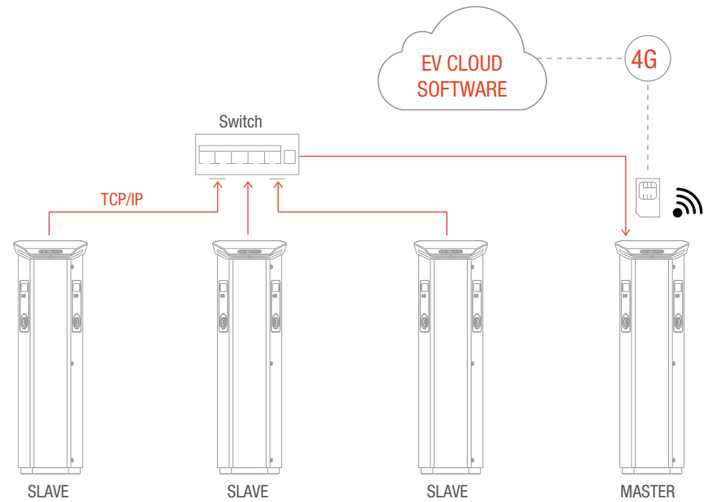

The charging stations are all equipped with Ethernet ports and can be wired to a switch in a star topology. Data is then transferred to the MASTER station that integrates a Router and the SIM. They are in and out wired with a TCP/IP line and only the last charging station has a 4G SIM that communicates with the backend via OCPP 1.6 JSON protocol.

I-FAST

Wallbox and Movable

Code	GW J9 011 W	GW J9 013 W	GW J9 811 W
Charging mode	Mode 4	Mode 4	Mode 4
Charging sockets	1 x CCS2	1 x CCS2 + 1 x CHAdeMO	1 x CCS2
Connector type	Mobile connector	Mobile connectors	Mobile connector
Cable length	4.5 m	4.5 m	4.5 m
Electrical specifications			
Input			
AC rated input voltage	3φ 380 ÷ 415 V ac	3φ 380 ÷ 415 V ac	3φ 380 ÷ 415 V ac
Maximum AC input current	3φ 47 A	3φ 47 A	3φ 47 A
Output			
Output voltage range	CCS2: 150 ÷ 950 V dc	CCS2: 150 ÷ 950 V dc	CCS2: 150 ÷ 950 V dc
Maximum output current	CCS2: 80 A	CCS2: 80 A CHAdeMO: 60 A	CCS2: 80 A
Maximum output power	30 kW	30 kW	30 kW
Power factor	> 0.99	> 0.99	> 0.99
Protections			
Incoming protection	OVP, OPP, OTP, UVP, SPD	OVP, OPP, OTP, UVP, SPD	OVP, OCP, OPP, OTP, UVP, RCD, SPD
Outbound protection	SCP, OCP, OVP, LVP, OTP, IMD	SCP, OCP, OVP, LVP, OTP, IMD	SCP, OCP, OVP, LVP, OTP, IMD
Energy meter	Yes, integrated DC Meter	Yes, integrated DC Meter	Yes, integrated DC Meter
Functional specifications			
Connectivity	Ethernet, WiFi and 4G	Ethernet, WiFi and 4G	Ethernet, WiFi and 4G
Communication	CAN BUS / RS485 / OCPP 1.6J / OCPP 2.0.1	CAN BUS / RS485 / OCPP 1.6J / OCPP 2.0.1	CAN BUS / RS485 / OCPP 1.6J / OCPP 2.0.1
Load management	Via cloud with OCPP	Via cloud with OCPP	Via cloud with OCPP
Charging activation	App / RFID / QR Code	App / RFID / QR Code	App / RFID / QR Code
Human interface	7" graphic display	7" graphic display	7" graphic display
Over The Air updates	Yes	Yes	Yes
Contactless payment solution	-	-	-
Charging interface	DIN 70121, ISO 15118-2	DIN 70121, ISO 15118-2	DIN 70121, ISO 15118-2
Local directives	-		
Mechanical specifications			
Installation type	Wall- / Floor-mounting	Wall- / Floor-mounting	Movable
Material	Painted steel sheet	Painted steel sheet	Painted steel sheet
Exterior colour	Chassis RAL 7021	Chassis RAL 7021	Chassis RAL 7021
Surface treatment	Carbon coating on front panels	Carbon coating on front panels	Carbon coating on front panels
Protection rating	IP55	IP55	IP55
Impact resistance rating	IK10	IK10	IK10
Operating temperature	-30 °C / +50 °C	-30 °C / +50 °C	-30 °C / +50 °C
Available accessories			
Floor installation support	GW J9 923	GW J9 923	-
Cable management	-	-	-
RFID card	GW J8 002	GW J8 002	GW J8 002
JOINON Data Micro SIM	GW J8 112	GW J8 112	GW J8 112

I-FAST

Compact

Code	GW J9 122 Y	GW J9 123 Y	GW J9 126 Y	GW J9 122 H
Charging mode	Mode 4	Mode 4	Mode 4	Mode 4
Charging sockets	2 x CCS2	1 x CCS2 + 1 x CHAdeMO	1 x CCS2 + 1 x GBT	2 x CCS2
Connector type	Mobile connectors	Mobile connectors	Mobile connectors	Mobile connectors
Cable length	4.5 m (optional 7 m)	4.5 m (optional 7 m)	4.5 m (optional 7 m)	4.5 m (optional 7 m)
Electrical specifications				
Input				
AC rated input voltage	3φ 380 ÷ 415 V ac	3φ 380 ÷ 415 V ac	3φ 380 ÷ 415 V ac	3φ 380 ÷ 415 V ac
Maximum AC input current	3φ 115 A	3φ 115 A	3φ 115 A	3φ 115 A
Output				
Output voltage range	CCS2: 150 ÷ 950 V dc	CCS2: 150 ÷ 950 V dc CHAdeMO: 150 ÷ 500 V dc	CCS2: 150 ÷ 950 V dc GBT: 150 ÷ 750 V dc	CCS2: 150 ÷ 950 V dc
Maximum output current	CCS2: 150 A	CCS2: 150 A CHAdeMO: 120 A	CCS2: 150 A GBT: 120 A	CCS2: 150 A
Maximum output power	60 kW	60 kW	60 kW	60 kW
Power factor	> 0.99	> 0.99	> 0.99	> 0.99
Protections				
Incoming protection	OVP, OCP, OPP, OTP, UVP, RCD, SPD	OVP, OCP, OPP, OTP, UVP, RCD, SPD	OVP, OCP, OPP, OTP, UVP, RCD, SPD	OVP, OCP, OPP, OTP, UVP, RCD, SPD
Outbound protection	SCP, OCP, OVP, LVP, OTP, IMD	SCP, OCP, OVP, LVP, OTP, IMD	SCP, OCP, OVP, LVP, OTP, IMD	SCP, OCP, OVP, LVP, OTP, IMD
Energy meter	Yes, integrated DC Meter	Yes, integrated DC Meter	Yes, integrated DC Meter	Yes, DC PTB Meter
Functional specifications				
Connectivity	Ethernet, WiFi and 4G	Ethernet, WiFi and 4G	Ethernet, WiFi and 4G	Ethernet, WiFi and 4G
Communication	CAN BUS / RS485 / OCPP 1.6J / OCPP 2.0.1	CAN BUS / RS485 / OCPP 1.6J / OCPP 2.0.1	CAN BUS / RS485 / OCPP 1.6J / OCPP 2.0.1	CAN BUS / RS485 / OCPP 1.6J / OCPP 2.0.1
Load management	Master&Slave / OCPP	Master&Slave / OCPP	Master&Slave / OCPP	Master&Slave / OCPP
Charging activation	App / RFID / QR Code	App / RFID / QR Code	App / RFID / QR Code	App / RFID / QR Code
Human interface	7" graphic display	7" graphic display	7" graphic display	7" graphic display
Over The Air updates	Yes	Yes	Yes	Yes
Contactless payment solution	Optional	Optional	Optional	Optional
Charging interface	DIN 70121, ISO 15118-2	DIN 70121, ISO 15118-2	DIN 70121, ISO 15118-2	DIN 70121, ISO 15118-2
Local directives	-			Eichrecht
Mechanical specifications				
Installation type	Floor-mounting	Floor-mounting	Floor-mounting	Floor-mounting
Material	Painted steel sheet	Painted steel sheet	Painted steel sheet	Painted steel sheet
Exterior colour	Chassis RAL 7021	Chassis RAL 7021	Chassis RAL 7021	Chassis RAL 7021
Surface treatment	Carbon coating on front panels	Carbon coating on front panels	Carbon coating on front panels	Carbon coating on front panels
Protection rating	IP55	IP55	IP55	IP55
Impact resistance rating	IK10	IK10	IK10	IK10
Operating temperature	-30 °C / +50 °C	-30 °C / +50 °C	-30 °C / +50 °C	-30 °C / +50 °C
Available accessories				
Floor installation support	GW J9 921	GW J9 921	GW J9 921	GW J9 921
Cable management	GW J9 911	GW J9 911	GW J9 911	GW J9 911
RFID card	GW J8 002	GW J8 002	GW J8 002	GW J8 002
JOINON Data Micro SIM	GW J8 112	GW J8 112	GW J8 112	GW J8 112

I-FAST

Station

Code	GW J9 232 Y	GW J9 242 Y	GW J9 252 Y	GW J9 262 Y
Charging mode	Mode 4	Mode 4	Mode 4	Mode 4
Charging sockets	2 x CCS2	2 x CCS2	2 x CCS2	2 x CCS2
Connector type	Mobile connectors	Mobile connectors	Mobile connectors	Mobile connectors
Cable length	4.5 m (optional 7 m or 9.5 m)	4.5 m (optional 7 m or 9.5 m)	4.5 m (optional 7 m or 9.5 m)	4.5 m (optional 7 m or 9.5 m)
Electrical specifications				
Input				
AC rated input voltage	3φ 380 ÷ 415 V ac	3φ 380 ÷ 415 V ac	3φ 380 ÷ 415 V ac	3φ 380 ÷ 415 V ac
Maximum AC input current	3φ 173 A	3φ 230 A	3φ 289 A	3φ 345 A
Output				
Output voltage range	CCS2: 150 ÷ 950 V dc	CCS2: 150 ÷ 950 V dc	CCS2: 150 ÷ 950 V dc	CCS2: 150 ÷ 950 V dc
Maximum output current	CCS2: 250 A	CCS2: 250 A	CCS2: 250 A	CCS2: 250 A
Maximum output power	90 kW	120 kW	150 kW	180 kW
Power factor	> 0.99	> 0.99	> 0.99	> 0.99
Protections				
Incoming protection	OVP, OCP, OPP, OTP, UVP, RCD, SPD	OVP, OCP, OPP, OTP, UVP, RCD, SPD	OVP, OCP, OPP, OTP, UVP, RCD, SPD	OVP, OCP, OPP, OTP, UVP, RCD, SPD
Outbound protection	SCP, OCP, OVP, LVP, OTP, IMD	SCP, OCP, OVP, LVP, OTP, IMD	SCP, OCP, OVP, LVP, OTP, IMD	SCP, OCP, OVP, LVP, OTP, IMD
Energy meter	Yes, integrated DC Meter	Yes, integrated DC Meter	Yes, integrated DC Meter	Yes, integrated DC Meter
Functional specifications				
Connectivity	Ethernet, WiFi and 4G	Ethernet, WiFi and 4G	Ethernet, WiFi and 4G	Ethernet, WiFi and 4G
Communication	CAN BUS / RS485 / OCPP 1.6J / OCPP 2.0.1	CAN BUS / RS485 / OCPP 1.6J / OCPP 2.0.1	CAN BUS / RS485 / OCPP 1.6J / OCPP 2.0.1	CAN BUS / RS485 / OCPP 1.6J / OCPP 2.0.1
Load management	Master&Slave / OCPP	Master&Slave / OCPP	Master&Slave / OCPP	Master&Slave / OCPP
Charging activation	App / RFID / QR Code	App / RFID / QR Code	App / RFID / QR Code	App / RFID / QR Code
Human interface	7” graphic display	7” graphic display	7” graphic display	7” graphic display
Over The Air updates	Yes	Yes	Yes	Yes
Contactless payment solution	Optional	Optional	Optional	Optional
Charging interface	DIN 70121, ISO 15118-2	DIN 70121, ISO 15118-2	DIN 70121, ISO 15118-2	DIN 70121, ISO 15118-2
Local directives	-			
Mechanical specifications				
Installation type	Floor-mounting	Floor-mounting	Floor-mounting	Floor-mounting
Material	Painted steel sheet	Painted steel sheet	Painted steel sheet	Painted steel sheet
Exterior colour	Chassis RAL 7021	Chassis RAL 7021	Chassis RAL 7021	Chassis RAL 7021
Surface treatment	Carbon coating on front panels	Carbon coating on front panels	Carbon coating on front panels	Carbon coating on front panels
Protection rating	IP55	IP55	IP55	IP55
Impact resistance rating	IK10	IK10	IK10	IK10
Operating temperature	-30 °C / +50 °C	-30 °C / +50 °C	-30 °C / +50 °C	-30 °C / +50 °C
Available accessories				
30 kW AC-DC additional power conversion module	GW J9 902	GW J9 902	GW J9 902	GW J9 902
Floor installation support	GW J9 922	GW J9 922	GW J9 922	GW J9 922
Cable management	GW J9 912	GW J9 912	GW J9 912	GW J9 912
RFID card	GW J8 002	GW J8 002	GW J8 002	GW J8 002
JOINON Data Micro SIM	GW J8 112	GW J8 112	GW J8 112	GW J8 112

Code	GW J9 232 H	GW J9 242 H	GW J9 252 H	GW J9 262 H
Charging mode	Mode 4	Mode 4	Mode 4	Mode 4
Charging sockets	2 x CCS2	2 x CCS2	2 x CCS2	2 x CCS2
Connector type	Mobile connectors	Mobile connectors	Mobile connectors	Mobile connectors
Cable length	4.5 m (optional 7 m or 9.5 m)	4.5 m (optional 7 m or 9.5 m)	4.5 m (optional 7 m or 9.5 m)	4.5 m (optional 7 m or 9.5 m)
Electrical specifications				
Input				
AC rated input voltage	3φ 380 ÷ 415 V ac	3φ 380 ÷ 415 V ac	3φ 380 ÷ 415 V ac	3φ 380 ÷ 415 V ac
Maximum AC input current	3φ 173 A	3φ 230 A	3φ 289 A	3φ 345 A
Output				
Output voltage range	CCS2: 150 ÷ 950 V dc	CCS2: 150 ÷ 950 V dc	CCS2: 150 ÷ 950 V dc	CCS2: 150 ÷ 950 V dc
Maximum output current	CCS2: 250 A	CCS2: 250 A	CCS2: 250 A	CCS2: 250 A
Maximum output power	90 kW	120 kW	150 kW	180 kW
Power factor	> 0.99	> 0.99	> 0.99	> 0.99
Protections				
Incoming protection	OVP, OCP, OPP, OTP, UVP, RCD, SPD	OVP, OCP, OPP, OTP, UVP, RCD, SPD	OVP, OCP, OPP, OTP, UVP, RCD, SPD	OVP, OCP, OPP, OTP, UVP, RCD, SPD
Outbound protection	SCP, OCP, OVP, LVP, OTP, IMD	SCP, OCP, OVP, LVP, OTP, IMD	SCP, OCP, OVP, LVP, OTP, IMD	SCP, OCP, OVP, LVP, OTP, IMD
Energy meter	Yes, DC PTB Meter	Yes, DC PTB Meter	Yes, DC PTB Meter	Yes, DC PTB Meter
Functional specifications				
Connectivity	Ethernet, WiFi and 4G	Ethernet, WiFi and 4G	Ethernet, WiFi and 4G	Ethernet, WiFi and 4G
Communication	CAN BUS / RS485 / OCPP 1.6J / OCPP 2.0.1	CAN BUS / RS485 / OCPP 1.6J / OCPP 2.0.1	CAN BUS / RS485 / OCPP 1.6J / OCPP 2.0.1	CAN BUS / RS485 / OCPP 1.6J / OCPP 2.0.1
Load management	Master&Slave / OCPP	Master&Slave / OCPP	Master&Slave / OCPP	Master&Slave / OCPP
Charging activation	App / RFID / QR Code	App / RFID / QR Code	App / RFID / QR Code	App / RFID / QR Code
Human interface	7” graphic display	7” graphic display	7” graphic display	7” graphic display
Over The Air updates	Yes	Yes	Yes	Yes
Contactless payment solution	Optional	Optional	Optional	Optional
Charging interface	DIN 70121, ISO 15118-2	DIN 70121, ISO 15118-2	DIN 70121, ISO 15118-2	DIN 70121, ISO 15118-2
Local directives	Eichrecht			
Mechanical specifications				
Installation type	Floor-mounting	Floor-mounting	Floor-mounting	Floor-mounting
Material	Painted steel sheet	Painted steel sheet	Painted steel sheet	Painted steel sheet
Exterior colour	Chassis RAL 7021	Chassis RAL 7021	Chassis RAL 7021	Chassis RAL 7021
Surface treatment	Carbon coating on front panels	Carbon coating on front panels	Carbon coating on front panels	Carbon coating on front panels
Protection rating	IP55	IP55	IP55	IP55
Impact resistance rating	IK10	IK10	IK10	IK10
Operating temperature	-30 °C / +50 °C	-30 °C / +50 °C	-30 °C / +50 °C	-30 °C / +50 °C
Available accessories				
30 kW AC-DC additional power conversion module	GW J9 902	GW J9 902	GW J9 902	GW J9 902
Floor installation support	GW J9 922	GW J9 922	GW J9 922	GW J9 922
Cable management	GW J9 912	GW J9 912	GW J9 912	GW J9 912
RFID card	GW J8 002	GW J8 002	GW J8 002	GW J8 002
JOINON Data Micro SIM	GW J8 112	GW J8 112	GW J8 112	GW J8 112

I-FAST
Station

Code	GW J9 233 Y	GW J9 243 Y	GW J9 253 Y	GW J9 263 Y
Charging mode	Mode 4	Mode 4	Mode 4	Mode 4
Charging sockets	1 x CCS2 + 1 x CHAdeMO	1 x CCS2 + 1 x CHAdeMO	1 x CCS2 + 1 x CHAdeMO	1 x CCS2 + 1 x CHAdeMO
Connector type	Mobile connectors	Mobile connectors	Mobile connectors	Mobile connectors
Cable length	4.5 m (optional 7 m)	4.5 m (optional 7 m)	4.5 m (optional 7 m)	4.5 m (optional 7 m)
Electrical specifications				
Input				
AC rated input voltage	3φ 380 ÷ 415 V ac	3φ 380 ÷ 415 V ac	3φ 380 ÷ 415 V ac	3φ 380 ÷ 415 V ac
Maximum AC input current	3φ 173 A	3φ 230 A	3φ 289 A	3φ 345 A
Output				
Output voltage range	CCS2: 150 ÷ 950 V dc CHAdeMO: 150 ÷ 500 V dc	CCS2: 150 ÷ 950 V dc CHAdeMO: 150 ÷ 500 V dc	CCS2: 150 ÷ 950 V dc CHAdeMO: 150 ÷ 500 V dc	CCS2: 150 ÷ 950 V dc CHAdeMO: 150 ÷ 500 V dc
Maximum output current	CCS2: 250 A CHAdeMO: 120 A	CCS2: 250 A CHAdeMO: 120 A	CCS2: 250 A CHAdeMO: 120 A	CCS2: 250 A CHAdeMO: 120 A
Maximum output power	90 kW	120 kW	150 kW	180 kW
Power factor	> 0.99	> 0.99	> 0.99	> 0.99
Protections				
Incoming protection	OVP, OCP, OPP, OTP, UVP, RCD, SPD	OVP, OCP, OPP, OTP, UVP, RCD, SPD	OVP, OCP, OPP, OTP, UVP, RCD, SPD	OVP, OCP, OPP, OTP, UVP, RCD, SPD
Outbound protection	SCP, OCP, OVP, LVP, OTP, IMD	SCP, OCP, OVP, LVP, OTP, IMD	SCP, OCP, OVP, LVP, OTP, IMD	SCP, OCP, OVP, LVP, OTP, IMD
Energy meter	Yes, integrated DC Meter	Yes, integrated DC Meter	Yes, integrated DC Meter	Yes, integrated DC Meter
Functional specifications				
Connectivity	Ethernet, WiFi and 4G	Ethernet, WiFi and 4G	Ethernet, WiFi and 4G	Ethernet, WiFi and 4G
Communication	CAN BUS / RS485 / OCPP 1.6J / OCPP 2.0.1	CAN BUS / RS485 / OCPP 1.6J / OCPP 2.0.1	CAN BUS / RS485 / OCPP 1.6J / OCPP 2.0.1	CAN BUS / RS485 / OCPP 1.6J / OCPP 2.0.1
Load management	Master&Slave / OCPP	Master&Slave / OCPP	Master&Slave / OCPP	Master&Slave / OCPP
Charging activation	App / RFID / QR Code	App / RFID / QR Code	App / RFID / QR Code	App / RFID / QR Code
Human interface	7” graphic display	7” graphic display	7” graphic display	7” graphic display
Over The Air updates	Yes	Yes	Yes	Yes
Contactless payment solution	Optional	Optional	Optional	Optional
Charging interface	DIN 70121, ISO 15118-2	DIN 70121, ISO 15118-2	DIN 70121, ISO 15118-2	DIN 70121, ISO 15118-2
Local directives	-			
Mechanical specifications				
Installation type	Floor-mounting	Floor-mounting	Floor-mounting	Floor-mounting
Material	Painted steel sheet	Painted steel sheet	Painted steel sheet	Painted steel sheet
Exterior colour	Chassis RAL 7021	Chassis RAL 7021	Chassis RAL 7021	Chassis RAL 7021
Surface treatment	Carbon coating on front panels	Carbon coating on front panels	Carbon coating on front panels	Carbon coating on front panels
Protection rating	IP55	IP55	IP55	IP55
Impact resistance rating	IK10	IK10	IK10	IK10
Operating temperature	-30 °C / +50 °C	-30 °C / +50 °C	-30 °C / +50 °C	-30 °C / +50 °C
Available accessories				
30 kW AC-DC additional power conversion module	GW J9 902	GW J9 902	GW J9 902	GW J9 902
Floor installation support	GW J9 922	GW J9 922	GW J9 922	GW J9 922
Cable management	GW J9 912	GW J9 912	GW J9 912	GW J9 912
RFID card	GW J8 002	GW J8 002	GW J8 002	GW J8 002
JOINON Data Micro SIM	GW J8 112	GW J8 112	GW J8 112	GW J8 112

Code	GW J9 236 Y	GW J9 246 Y	GW J9 256 Y	GW J9 266 Y
Charging mode	Mode 4	Mode 4	Mode 4	Mode 4
Charging sockets	1 x CCS2 + 1 x GBT	1 x CCS2 + 1 x GBT	1 x CCS2 + 1 x GBT	1 x CCS2 + 1 x GBT
Connector type	Mobile connectors	Mobile connectors	Mobile connectors	Mobile connectors
Cable length	4.5 m (optional 7 m)	4.5 m (optional 7 m)	4.5 m (optional 7 m)	4.5 m (optional 7 m)
Electrical specifications				
Input				
AC rated input voltage	3φ 380 ÷ 415 V ac	3φ 380 ÷ 415 V ac	3φ 380 ÷ 415 V ac	3φ 380 ÷ 415 V ac
Maximum AC input current	3φ 173 A	3φ 230 A	3φ 289 A	3φ 345 A
Output				
Output voltage range	CCS2: 150 ÷ 950 V dc GBT: 150 ÷ 750 V dc	CCS2: 150 ÷ 950 V dc GBT: 150 ÷ 750 V dc	CCS2: 150 ÷ 950 V dc GBT: 150 ÷ 750 V dc	CCS2: 150 ÷ 950 V dc GBT: 150 ÷ 750 V dc
Maximum output current	CCS2: 250 A GBT: 120 A	CCS2: 250 A GBT: 120 A	CCS2: 250 A GBT: 120 A	CCS2: 250 A GBT: 120 A
Maximum output power	90 kW	120 kW	150 kW	180 kW
Power factor	> 0.99	> 0.99	> 0.99	> 0.99
Protections				
Incoming protection	OVP, OCP, OPP, OTP, UVP, RCD, SPD	OVP, OCP, OPP, OTP, UVP, RCD, SPD	OVP, OCP, OPP, OTP, UVP, RCD, SPD	OVP, OCP, OPP, OTP, UVP, RCD, SPD
Outbound protection	SCP, OCP, OVP, LVP, OTP, IMD	SCP, OCP, OVP, LVP, OTP, IMD	SCP, OCP, OVP, LVP, OTP, IMD	SCP, OCP, OVP, LVP, OTP, IMD
Energy meter	Yes, integrated DC Meter	Yes, integrated DC Meter	Yes, integrated DC Meter	Yes, integrated DC Meter
Functional specifications				
Connectivity	Ethernet, WiFi and 4G	Ethernet, WiFi and 4G	Ethernet, WiFi and 4G	Ethernet, WiFi and 4G
Communication	CAN BUS / RS485 / OCPP 1.6J / OCPP 2.0.1	CAN BUS / RS485 / OCPP 1.6J / OCPP 2.0.1	CAN BUS / RS485 / OCPP 1.6J / OCPP 2.0.1	CAN BUS / RS485 / OCPP 1.6J / OCPP 2.0.1
Load management	Master&Slave / OCPP	Master&Slave / OCPP	Master&Slave / OCPP	Master&Slave / OCPP
Charging activation	App / RFID / QR Code	App / RFID / QR Code	App / RFID / QR Code	App / RFID / QR Code
Human interface	7” graphic display	7” graphic display	7” graphic display	7” graphic display
Over The Air updates	Yes	Yes	Yes	Yes
Contactless payment solution	Optional	Optional	Optional	Optional
Charging interface	DIN 70121, ISO 15118-2	DIN 70121, ISO 15118-2	DIN 70121, ISO 15118-2	DIN 70121, ISO 15118-2
Local directives	-			
Mechanical specifications				
Installation type	Floor-mounting	Floor-mounting	Floor-mounting	Floor-mounting
Material	Painted steel sheet	Painted steel sheet	Painted steel sheet	Painted steel sheet
Exterior colour	Chassis RAL 7021	Chassis RAL 7021	Chassis RAL 7021	Chassis RAL 7021
Surface treatment	Carbon coating on front panels	Carbon coating on front panels	Carbon coating on front panels	Carbon coating on front panels
Protection rating	IP55	IP55	IP55	IP55
Impact resistance rating	IK10	IK10	IK10	IK10
Operating temperature	-30 °C / +50 °C	-30 °C / +50 °C	-30 °C / +50 °C	-30 °C / +50 °C
Available accessories				
30 kW AC-DC additional power conversion module	GW J9 902	GW J9 902	GW J9 902	GW J9 902
Floor installation support	GW J9 922	GW J9 922	GW J9 922	GW J9 922
Cable management	GW J9 912	GW J9 912	GW J9 912	GW J9 912
RFID card	GW J8 002	GW J8 002	GW J8 002	GW J8 002
JOINON Data Micro SIM	GW J8 112	GW J8 112	GW J8 112	GW J8 112

I-FAST

HPC Compact

Code	GW J9 372 Y	GW J9 373 Y	GW J9 372 H
Charging mode	Mode 4	Mode 4	Mode 4
Charging sockets	2 x CCS2	1 x CCS2 + 1 x CHAdeMO	2 x CCS2
Connector type	Mobile connectors	Mobile connectors	Mobile connectors
Cable length	4.5 m (optional 7 m)	4.5 m (optional 7 m)	4.5 m (optional 7 m)
Electrical specifications			
Input			
AC rated input voltage	3φ 380 ÷ 415 V ac	3φ 380 ÷ 415 V ac	3φ 380 ÷ 415 V ac
Maximum AC input current	3φ 460 A	3φ 460 A	3φ 460 A
Output			
Output voltage range	CCS2: 150 ÷ 950 V dc	CCS2: 150 ÷ 950 V dc CHAdeMO: 150 ÷ 500 V dc	CCS2: 150 ÷ 950 V dc
Maximum output current	CCS2: 300 A (optional 500 A liquid-cooled)	CCS2: 300 A (optional 500 A liquid-cooled) CHAdeMO: 200 A	CCS2: 300 A (optional 500 A liquid-cooled)
Maximum output power	240 kW	240 kW	240 kW
Power factor	> 0.99	> 0.99	> 0.99
Protections			
Incoming protection	OVP, OCP, OPP, OTP, UVP, RCD, SPD	OVP, OCP, OPP, OTP, UVP, RCD, SPD	OVP, OCP, OPP, OTP, UVP, RCD, SPD
Outbound protection	SCP, OCP, OVP, LVP, OTP, IMD	SCP, OCP, OVP, LVP, OTP, IMD	SCP, OCP, OVP, LVP, OTP, IMD
Energy meter	Yes, integrated DC Meter	Yes, integrated DC Meter	Yes, DC PTB Meter
Functional specifications			
Connectivity	Ethernet, WiFi and 4G	Ethernet, WiFi and 4G	Ethernet, WiFi and 4G
Communication	CAN BUS / RS485 / OCPP 1.6J / OCPP 2.0.1	CAN BUS / RS485 / OCPP 1.6J / OCPP 2.0.1	CAN BUS / RS485 / OCPP 1.6J / OCPP 2.0.1
Load management	Master&Slave / OCPP	Master&Slave / OCPP	Master&Slave / OCPP
Charging activation	App / RFID / QR Code	App / RFID / QR Code	App / RFID / QR Code
Human interface	21” graphic display	21” graphic display	21” graphic display
Over The Air updates	Yes	Yes	Yes
Contactless payment solution	Optional	Optional	Optional
Charging interface	DIN 70121, ISO 15118-2	DIN 70121, ISO 15118-2	DIN 70121, ISO 15118-2
Local directives	-		Eichrecht
Mechanical specifications			
Installation type	Floor-mounting	Floor-mounting	Floor-mounting
Material	Painted steel sheet	Painted steel sheet	Painted steel sheet
Exterior colour	Chassis RAL 7021	Chassis RAL 7021	Chassis RAL 7021
Surface treatment	Carbon coating on front panels	Carbon coating on front panels	Carbon coating on front panels
Protection rating	IP55	IP55	IP55
Impact resistance rating	IK10	IK10	IK10
Operating temperature	-30 °C / +50 °C	-30 °C / +50 °C	-30 °C / +50 °C
Available accessories			
Cable management	GW J9 913	GW J9 913	GW J9 913
RFID card	GW J8 002	GW J8 002	GW J8 002
JOINON Data Micro SIM	GW J8 112	GW J8 112	GW J8 112

I-FAST

HPC Station

Code	GW J9 482 Y	GW J9 492 Y	GW J9 402 Y
Charging mode	Mode 4	Mode 4	Mode 4
Charging sockets	2 x CCS2 (optional 4x)	2 x CCS2 (optional 4x)	2 x CCS2 (optional 4x)
Connector type	Mobile connectors	Mobile connectors	Mobile connectors
Cable length	4.5 m (optional 7 m)	4.5 m (optional 7 m)	4.5 m (optional 7 m)
Electrical specifications			
Input			
AC rated input voltage	3φ 380 ÷ 415 V ac	3φ 380 ÷ 415 V ac	3φ 380 ÷ 415 V ac
Maximum AC input current	3φ 587 A	3φ 734 A	3φ 880 A
Output			
Output voltage range	CCS2: 150 ÷ 950 V dc	CCS2: 150 ÷ 950 V dc	CCS2: 150 ÷ 950 V dc
Maximum output current	CCS2: 300 A (optional 500 A liquid-cooled)	CCS2: 300 A (optional 500 A liquid-cooled)	CCS2: 300 A (optional 500 A liquid-cooled)
Maximum output power	320 kW	400 kW	480 kW
Power factor	> 0.99	> 0.99	> 0.99
Protections			
Incoming protection	OVP, OCP, OPP, OTP, UVP, RCD, SPD	OVP, OCP, OPP, OTP, UVP, RCD, SPD	OVP, OCP, OPP, OTP, UVP, RCD, SPD
Outbound protection	SCP, OCP, OVP, LVP, OTP, IMD	SCP, OCP, OVP, LVP, OTP, IMD	SCP, OCP, OVP, LVP, OTP, IMD
Energy meter	Yes, integrated DC Meter	Yes, integrated DC Meter	Yes, integrated DC Meter
Functional specifications			
Connectivity	Ethernet, WiFi and 4G	Ethernet, WiFi and 4G	Ethernet, WiFi and 4G
Communication	CAN BUS / RS485 / OCPP 1.6J / OCPP 2.0.1	CAN BUS / RS485 / OCPP 1.6J / OCPP 2.0.1	CAN BUS / RS485 / OCPP 1.6J / OCPP 2.0.1
Load management	Master&Slave / OCPP	Master&Slave / OCPP	Master&Slave / OCPP
Charging activation	App / RFID / QR Code	App / RFID / QR Code	App / RFID / QR Code
Human interface	7" graphic display (optional additional 21" adv display)	7" graphic display (optional additional 21" adv display)	7" graphic display (optional additional 21" adv display)
Over The Air updates	Yes	Yes	Yes
Contactless payment solution	Optional	Optional	Optional
Charging interface	DIN 70121, ISO 15118-2	DIN 70121, ISO 15118-2	DIN 70121, ISO 15118-2
Local directives	-		
Mechanical specifications			
Installation type	Floor-mounting	Floor-mounting	Floor-mounting
Material	Painted steel sheet	Painted steel sheet	Painted steel sheet
Exterior colour	Chassis Grey, Front panel RAL 7021	Chassis Grey, Front panel RAL 7021	Chassis Grey, Front panel RAL 7021
Surface treatment	Powder coating	Powder coating	Powder coating
Protection rating	IP55	IP55	IP55
Impact resistance rating	IK10	IK10	IK10
Operating temperature	-30 °C / +50 °C	-30 °C / +50 °C	-30 °C / +50 °C
Available accessories			
40 kW AC-DC additional power conversion module	GW J9 903	GW J9 903	GW J9 903
Cable management	GW J9 914	GW J9 914	GW J9 914
Cable management (4 connectors)	GW J9 915	GW J9 915	GW J9 915
RFID card	GW J8 002	GW J8 002	GW J8 002
JOINON Data Micro SIM	GW J8 112	GW J8 112	GW J8 112

Code	GW J9 482 H	GW J9 492 H	GW J9 402 H
Charging mode	Mode 4	Mode 4	Mode 4
Charging sockets	2 x CCS2 (optional 4x)	2 x CCS2 (optional 4x)	2 x CCS2 (optional 4x)
Connector type	Mobile connectors	Mobile connectors	Mobile connectors
Cable length	4.5 m (optional 7 m)	4.5 m (optional 7 m)	4.5 m (optional 7 m)
Electrical specifications			
Input			
AC rated input voltage	3φ 380 ÷ 415 V ac	3φ 380 ÷ 415 V ac	3φ 380 ÷ 415 V ac
Maximum AC input current	3φ 587 A	3φ 734 A	3φ 880 A
Output			
Output voltage range	CCS2: 150 ÷ 950 V dc	CCS2: 150 ÷ 950 V dc	CCS2: 150 ÷ 950 V dc
Maximum output current	CCS2: 300 A (optional 500 A liquid-cooled)	CCS2: 300 A (optional 500 A liquid-cooled)	CCS2: 300 A (optional 500 A liquid-cooled)
Maximum output power	320 kW	400 kW	480 kW
Power factor	> 0.99	> 0.99	> 0.99
Protections			
Incoming protection	OVP, OCP, OPP, OTP, UVP, RCD, SPD	OVP, OCP, OPP, OTP, UVP, RCD, SPD	OVP, OCP, OPP, OTP, UVP, RCD, SPD
Outbound protection	SCP, OCP, OVP, LVP, OTP, IMD	SCP, OCP, OVP, LVP, OTP, IMD	SCP, OCP, OVP, LVP, OTP, IMD
Energy meter	Yes, DC PTB Meter	Yes, DC PTB Meter	Yes, DC PTB Meter
Functional specifications			
Connectivity	Ethernet, WiFi and 4G	Ethernet, WiFi and 4G	Ethernet, WiFi and 4G
Communication	CAN BUS / RS485 / OCPP 1.6J / OCPP 2.0.1	CAN BUS / RS485 / OCPP 1.6J / OCPP 2.0.1	CAN BUS / RS485 / OCPP 1.6J / OCPP 2.0.1
Load management	Master&Slave / OCPP	Master&Slave / OCPP	Master&Slave / OCPP
Charging activation	App / RFID / QR Code	App / RFID / QR Code	App / RFID / QR Code
Human interface	7" graphic display (optional additional 21" adv display)	7" graphic display (optional additional 21" adv display)	7" graphic display (optional additional 21" adv display)
Over The Air updates	Yes	Yes	Yes
Contactless payment solution	Optional	Optional	Optional
Charging interface	DIN 70121, ISO 15118-2	DIN 70121, ISO 15118-2	DIN 70121, ISO 15118-2
Local directives	Eichrecht		
Mechanical specifications			
Installation type	Floor-mounting	Floor-mounting	Floor-mounting
Material	Painted steel sheet	Painted steel sheet	Painted steel sheet
Exterior colour	Chassis Grey, Front panel RAL 7021	Chassis Grey, Front panel RAL 7021	Chassis Grey, Front panel RAL 7021
Surface treatment	Powder coating	Powder coating	Powder coating
Protection rating	IP55	IP55	IP55
Impact resistance rating	IK10	IK10	IK10
Operating temperature	-30 °C / +50 °C	-30 °C / +50 °C	-30 °C / +50 °C
Available accessories			
40 kW AC-DC additional power conversion module	GW J9 903	GW J9 903	GW J9 903
Cable management	GW J9 914	GW J9 914	GW J9 914
Cable management (4 connectors)	GW J9 915	GW J9 915	GW J9 915
RFID card	GW J8 002	GW J8 002	GW J8 002
JOINON Data Micro SIM	GW J8 112	GW J8 112	GW J8 112

I-FAST

WALLBOX

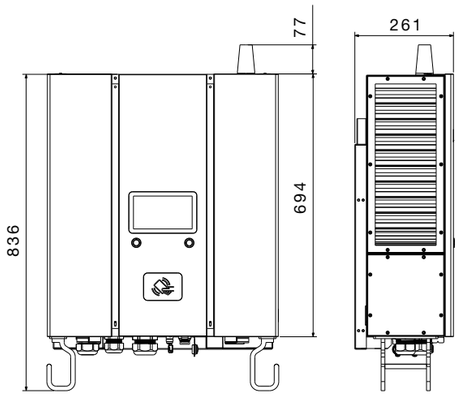

MOVABLE

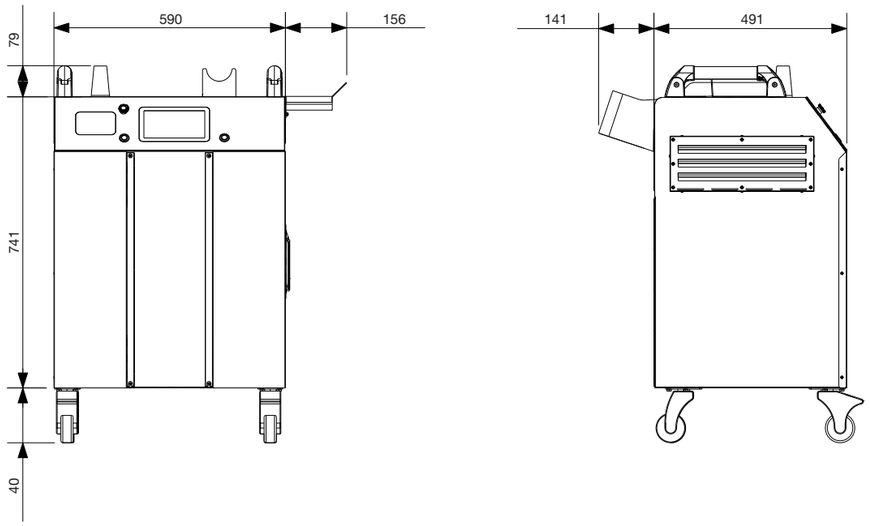

COMPACT

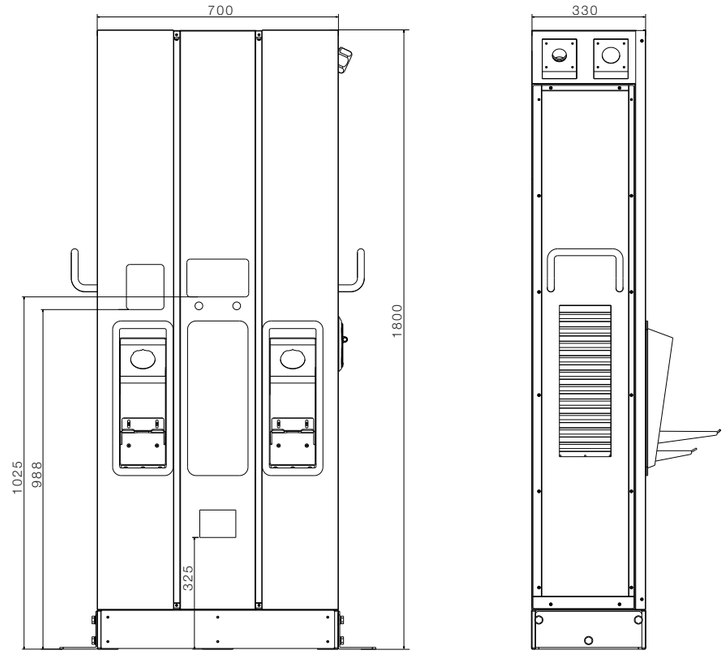

STATION

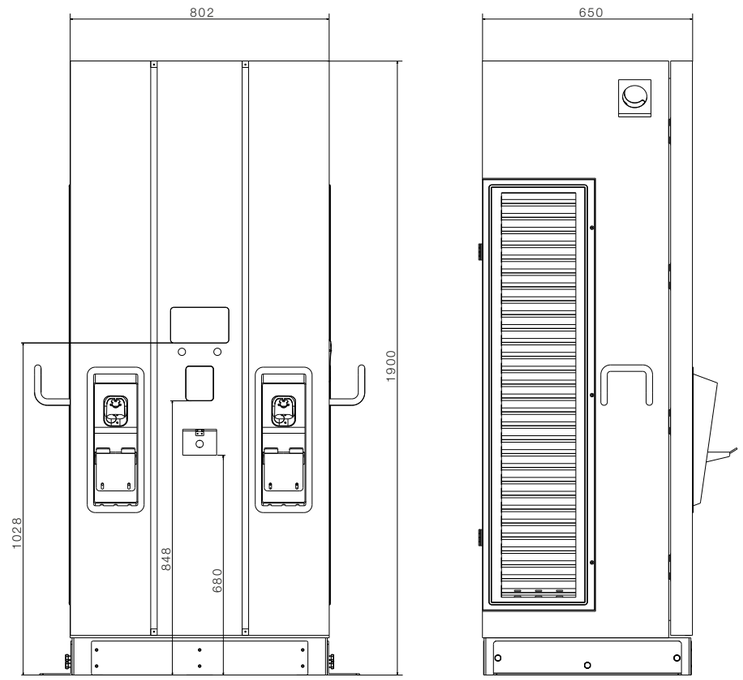

HPC COMPACT

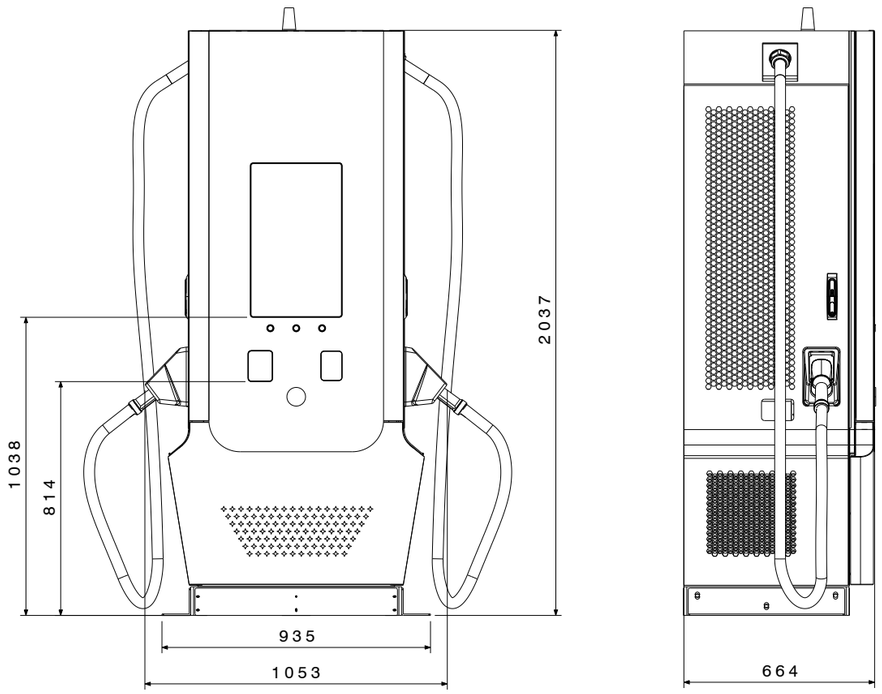

HPC STATION

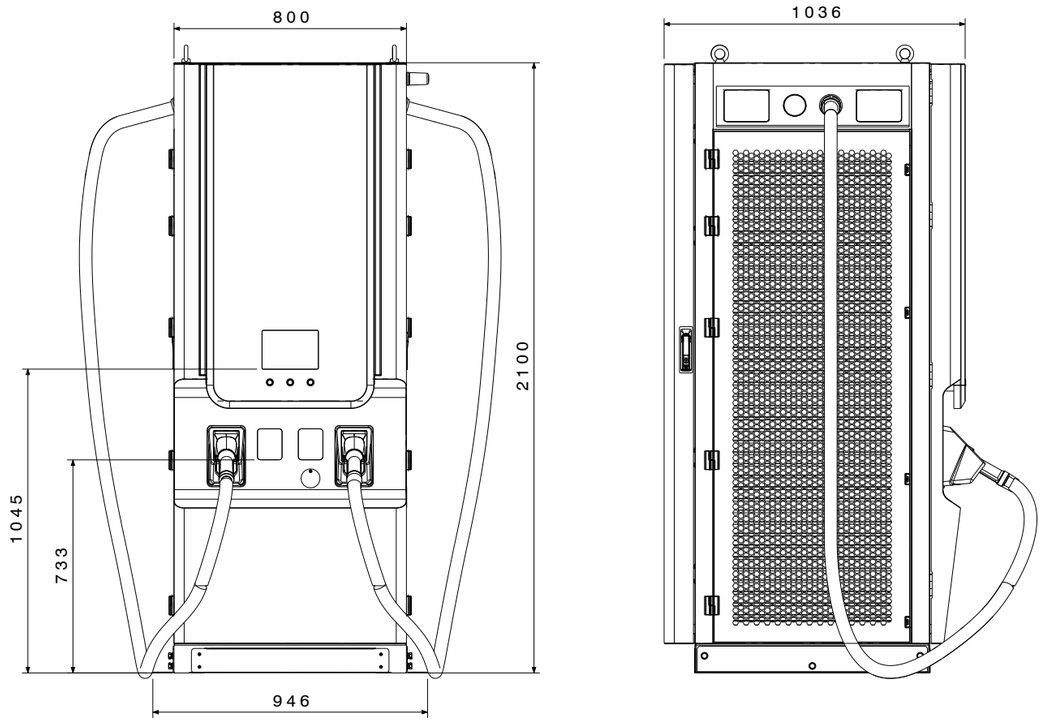

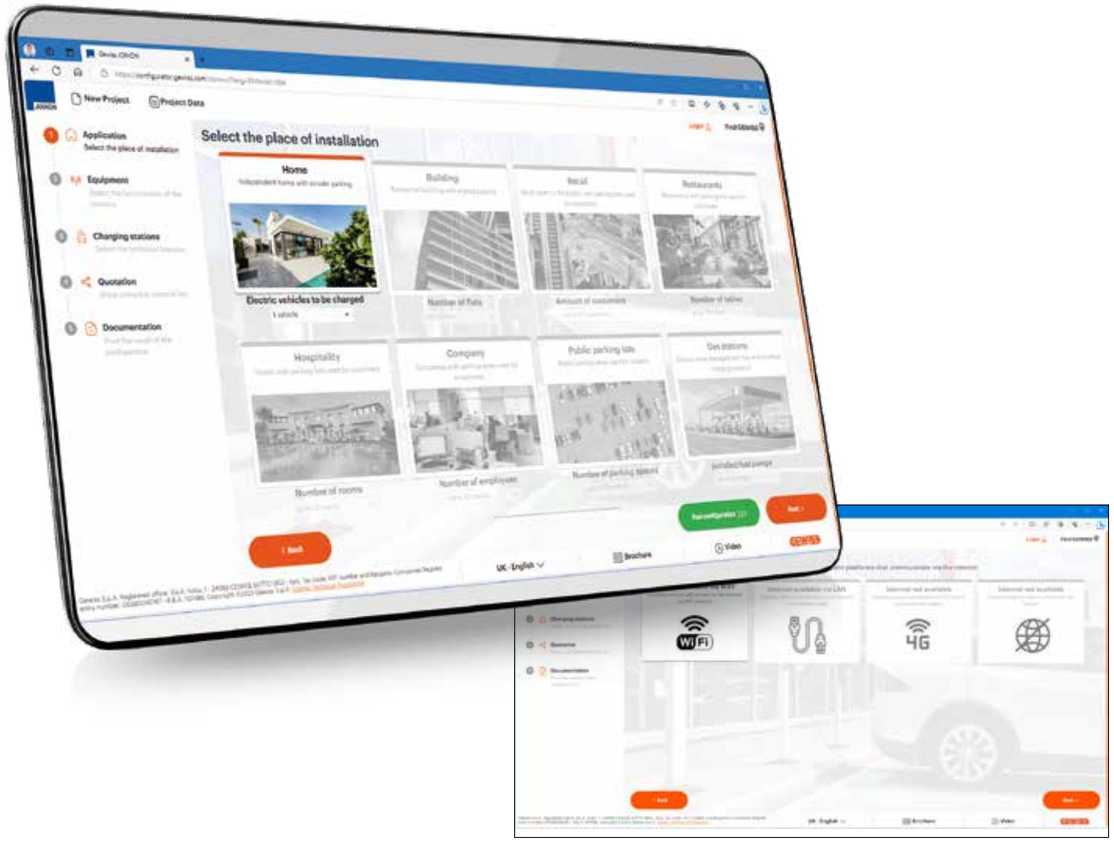

Trade assistance

CONFIGURATOR FOR DEDICATED EV CHARGING SOLUTIONS

JOINON
CONFIG

JOINON Config is an online configurator available on the **gewiss.com** website that can be used from any internet-connected device, on which you can configure and budget EV charging solutions through a simple wizard guide. The configurator allows you to choose between different applications (places to install charging infrastructures), suggesting the most suitable solution, with scope for customisation.

The user is guided in the choice and configuration of the charging infrastructures through the following selection steps:

- **Installation location**
- **Charging infrastructure equipment and technology**
- **Specific charging station data**
- **Accessories**

Once setup is complete, you will be able to view the complete list of materials for the system and export it in various formats.

Scan the QR Code and discover all the advantages of the online configurator for the choice and a quote on electric vehicle charging infrastructure.

NOTES

NOTES

NOTES

PB 22915 EN - 07.26

GEWISS S.p.A.
Registered Office: Via Domenico Bosatelli, 1
24069 Cenate Sotto (BG), Italy
T +39 035 946 111
E gewiss@gewiss.com
www.gewiss.com

Bergamo Business Register / VAT / Tax Code (IT) 00385040167
Economic and Administrative Index 107496 - Share Capital 60,096,000.00 EUR fully paid up
Company subject to the management and coordination of Polifin S.p.A.

Visit www.gewiss.com
and follow us on

powered by GEWISS