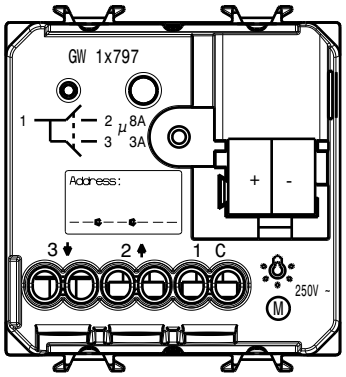
GW 1x797
1
2
3
μ 8A
3A
Address:
+
-
3
2
1 C
250V -
M

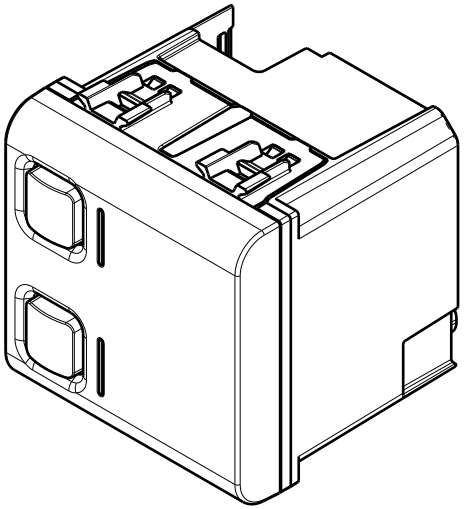

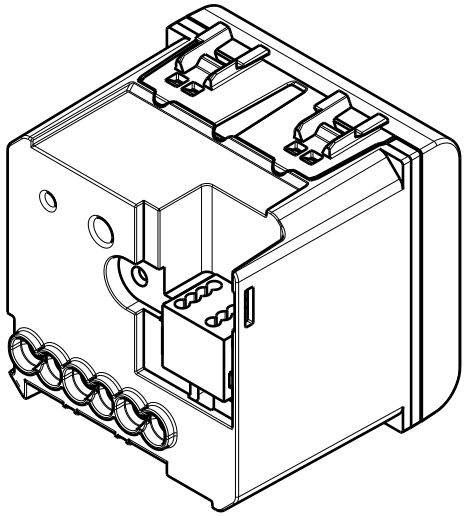

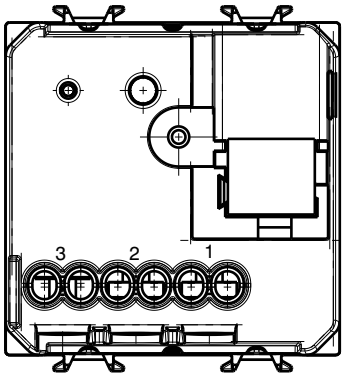
3
2
1

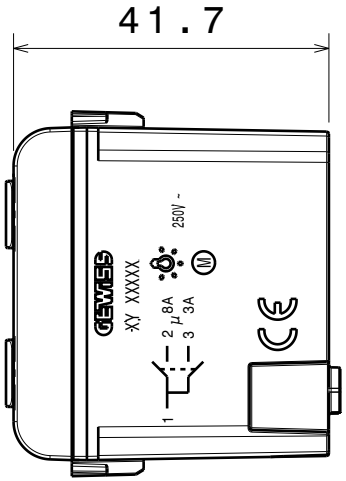
41.7
250V -
M
XX XXXXX
2
μ 8A
3
3A
1

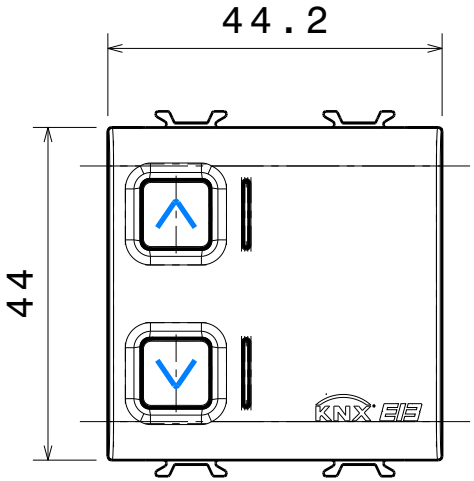
44.2
44
KNX EIB