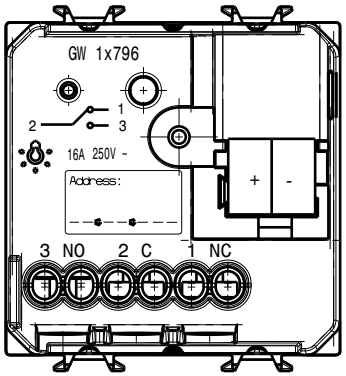
GW 1x796
1
2
3
16A 250V ~
Address:
+
-
3 NO
2 C
1 NC

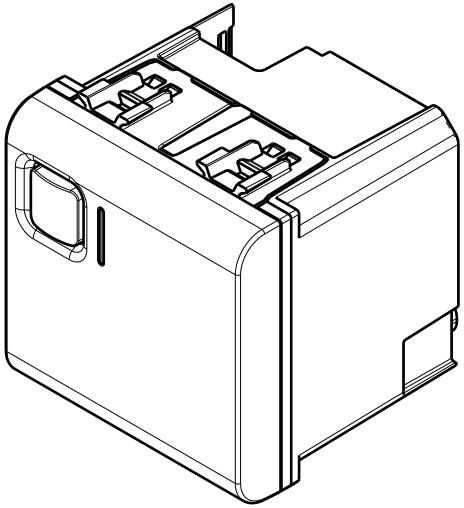

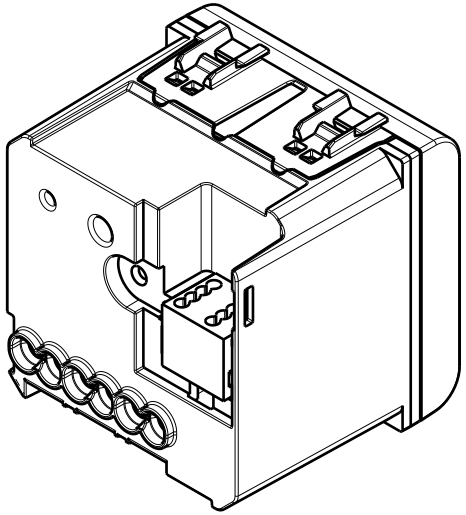

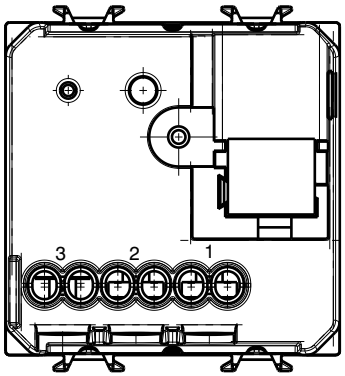
3
2
1

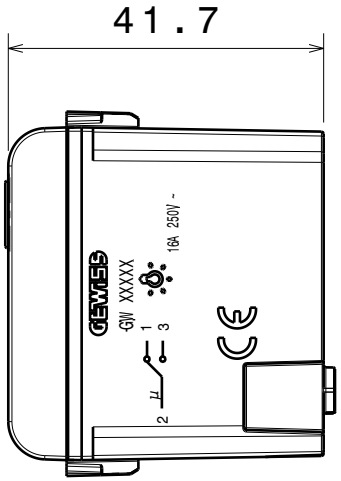
41.7
GEWISS
GW XXXXX
16A 250V ~
1
3
2

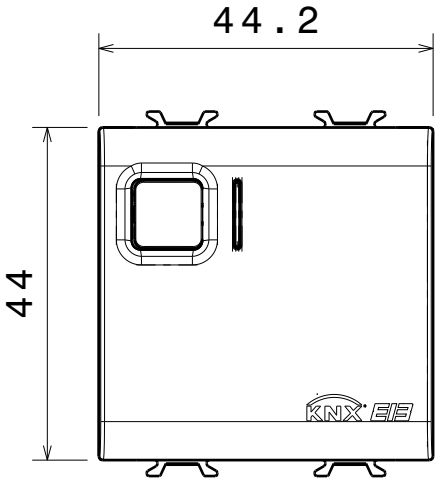
44.2
44
KNX EIB