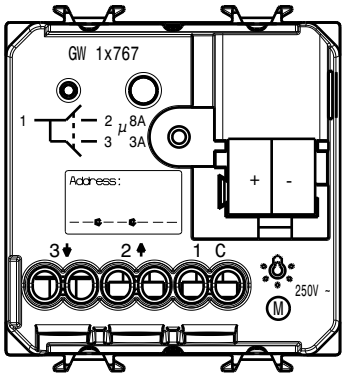
GW 1x767
1
2
3
μ 8A
3A
Address:
+
-
3
2
1 C
250V -
M

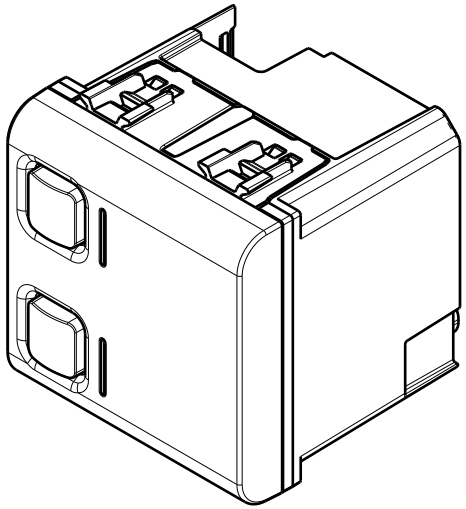

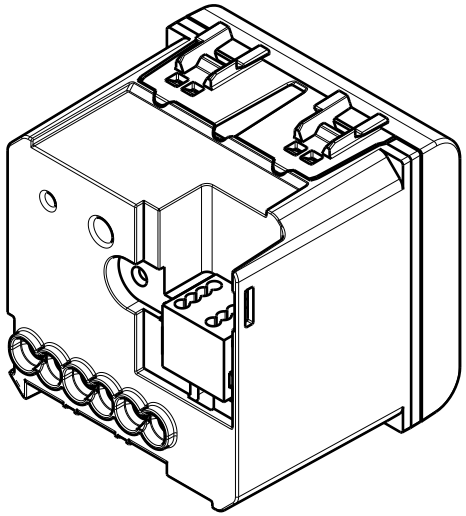

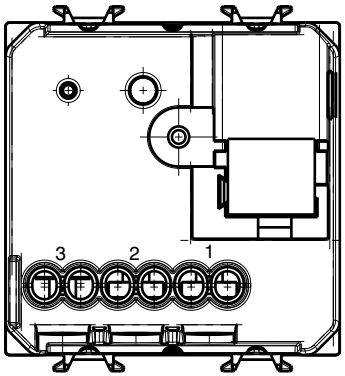
3
2
1

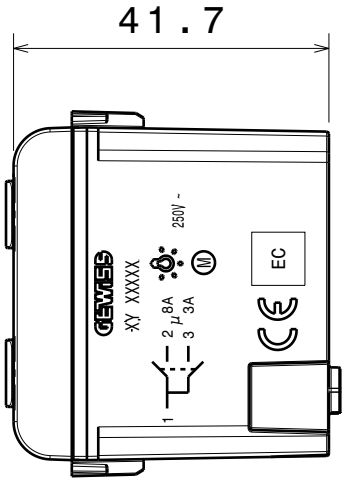
41.7
GEWISS
XY XXXXX
250V -
M
2
μ 8A
3
3A
1
EC

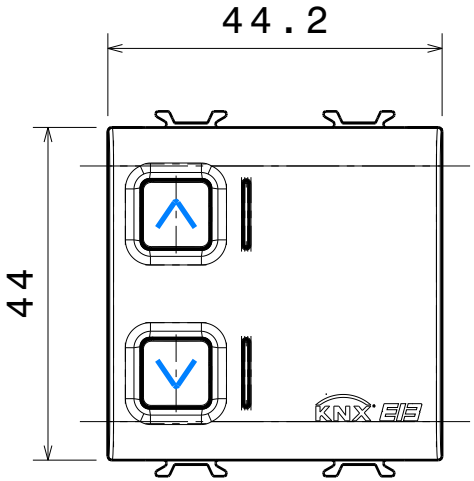
44.2
44
KNX EIB