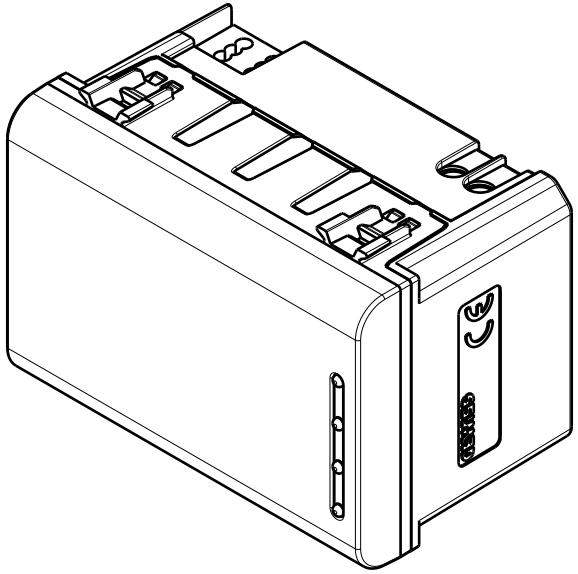

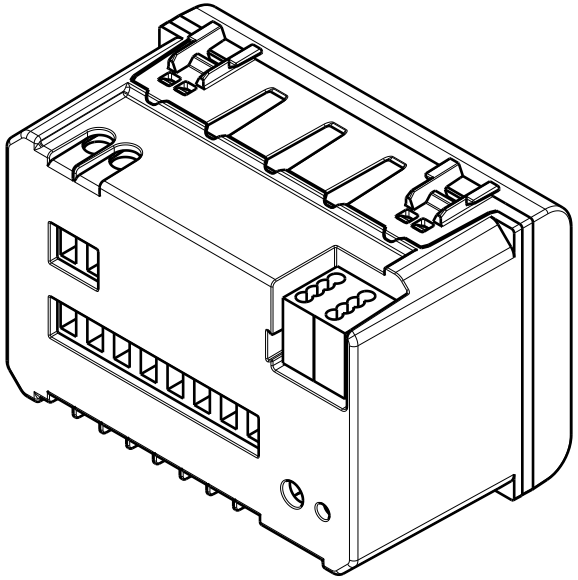

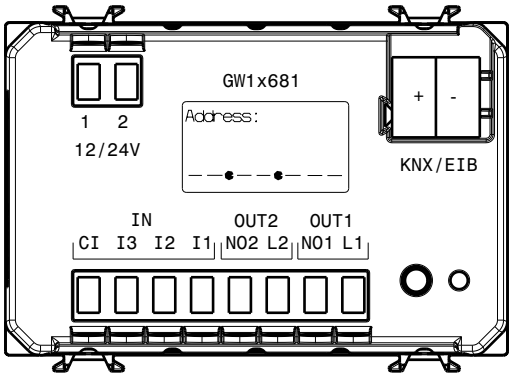
GW1x681
Address:
1 2
12/24V
+ -
KNX/EIB
IN
CI I3 I2 I1
OUT2
NO2 L2
OUT1
NO1 L1

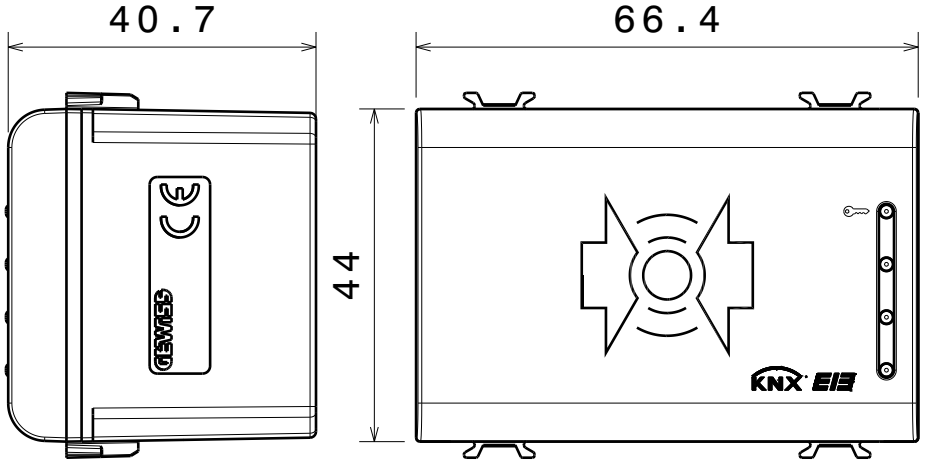
40.7
66.4
44
KNX EIB