Product Data Sheet

GW85371

On request

Antireflecterend scherm HORUS 1.

Omschrijving	Antireflecterend scherm	Gewicht (kg)	0.5
Kleur	Rookgrijs	Electrocod	240

DIMENSIONAL

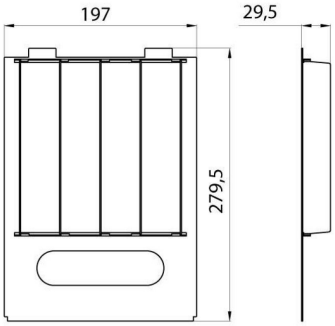

PHOTOMETRIC DISTRIBUTION

TECHNICAL SYMBOLOGY

Data, measures, designs and pictures are for information purpose only, last update 29/04/2024. They can be changed at any moment, therefore it is always ecommended to read the last updated version published on the website www.gewiss.com.Lumen output and system power are subject to a tolerance of +/- 10%. Unless stated otherwise, the values apply to an ambient temperature of 25°C. Terms of warranty at https://www.gewiss.com/it/en/company/landingpage/led-warranty. - 1 of 1