Product Data Sheet

GWD4449

90 RCD Range



Description	RESIDUAL CURRENT CIRCUIT BREAKER
Code	IDP NA
No. of poles	4P
No. modules	4
Rated current	63 A
Rated residual operating current	300 mA
Type	A
Rated voltage (EN/IEC 61008-1, 61008-2-1)	400/415 V

Standard	IEC/EN 61008-1, IEC/EN 61008-2-1	Rated frequency (Hz)	50 Hz
Insulation voltage (Ui)	500 V	Rated impulse withstand voltage (Uimp)	4 kV
Overvoltage category	III	Level of immunity (8/20 µs)	250 A
Section rigid cable	<=1x35 - <=2x16 - <=1x16+2x10 mm²	Section flexible cable	<=1x35 - <=2x16 - <=1x16+2x10 mm²
Rated tightening torque	2 Nm	Double connection	No
Operating temperature	-5°C ÷ +40°C	Stocking temperature	-40°C ÷ +70°C
Electrical endurance	5000	Mechanical endurance	10.000
Auxiliaries compatibility	No	ReStart compatibility	No
Assembly position	Any		

DIMENSIONAL

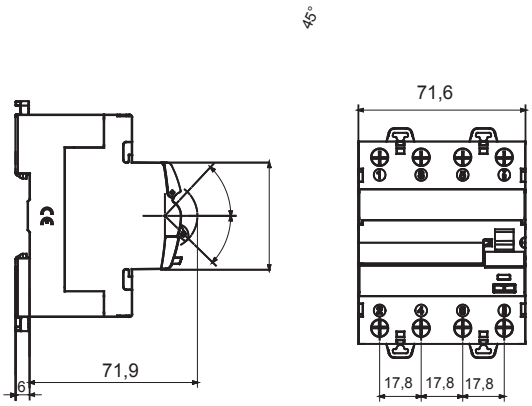

WIRING DIAGRAM

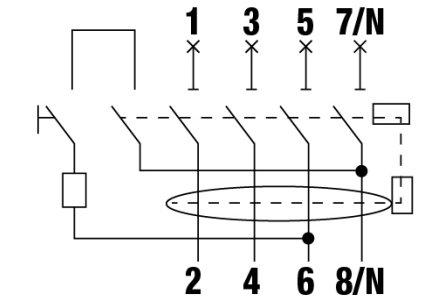

4P - 4 MODULES

STANDARDS/APPROVALS

GEWISS S.p.A. Via A. Volta, 1
24069 Cenate Sotto - Bergamo - Italy
tel. +39 035 94 61 11 fax +39 035 94 69 09
Company subject to the management and coordination of Polifin S.p.A.

www.gewiss.com
sat@gewiss.com
Last update 25/11/2026

Data, measures, designs and pictures are shown only as informative purposes, and could be changed without previous notice