Product Data Sheet

# GWD4152

90 RCD Range



| | |
|---|---|
| Description | RESIDUAL CURRENT CIRCUIT BREAKER |
| Code | IDP |
| No. of poles | 4P |
| No. modules | 4 |
| Rated current | 63 A |
| Rated residual operating current | 30 mA |
| Type | A |
| Rated voltage (EN/IEC 61008-1, 61008-2-1) | 400/415 V |

| | | | |
|---|---|---|---|
| Standard | IEC/EN 61008-1, IEC/EN 61008-2-1 | Rated frequency (Hz) | 50/60 Hz |
| Insulation voltage (Ui) | 500 V | Rated impulse withstand voltage (Uimp) | 4 kV |
| Overvoltage category | III | Level of immunity (8/20 µs) | 250 A |
| Section rigid cable | <=1x35 - <=2x16 - <=1x16+2x10 mm² | Section flexible cable | <=1x35 - <=2x16 - <=1x16+2x10 mm² |
| Rated tightening torque | 3 Nm | Double connection | YES (up stream and down stram) |
| Operating temperature | -25 +60°C ( 40°C with derating) | Stocking temperature | -40°C ÷ +70°C |
| Electrical endurance | ≥ 10.000 | Mechanical endurance | ≥ 20000 |
| Auxiliaries compatibility | Yes | ReStart compatibility | Yes |
| Assembly position | Any | | |

## DIMENSIONAL

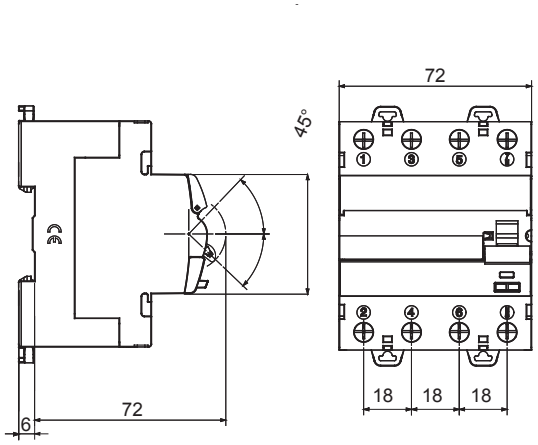


## WIRING DIAGRAM

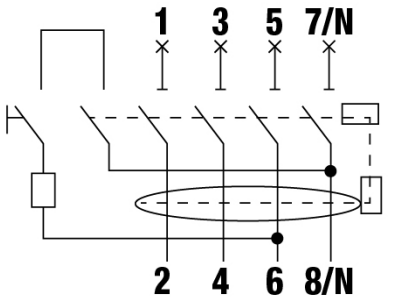


**4P - 4 MODULES**

## STANDARDS/APPROVALS

GEWISS S.p.A. Via A. Volta, 1
24069 Cenate Sotto - Bergamo - Italy
tel. +39 035 94 61 11 fax +39 035 94 69 09
Company subject to the management and coordination of Polifin S.p.A.

www.gewiss.com
sat@gewiss.com
Last update 26/11/2026

Data, measures, designs and pictures are shown only as informative purposes, and could be changed without previous notice