Product Data Sheet

GWA1514

CHORUSMART - domestic range



Wirelessly connected device with Zigbee protocol from the ChoruSmart system. It can be used with Home Gateway for “CONNECTED SMART HOME” solutions and with Smart Gateway for “HOME AND BUILDING PRO” solutions. Ideal for residential and small commercial offices, new builds and renovations. Zigbee technology is a secure and reliable technology in which data is encrypted and every node within the network ensures reachability across all devices (mesh network). This device can also be used without Home Gateway and Smart Gateway (manual configuration with dip-switch or via IoT Configurator), in which case supervision via the app is not possible.

Category	Sensor H2O	Colour	White
Material	Technopolymer	Communication protocol	Zigbee (IEEE 802.15.4)
Supply voltage	Battery powered	Power supply batteries	CR123 replaceable
Output power	8 dBm	Siren output	85 dB/3 m
Temperature sensor	0…50 °C	Standard	2014/53/EU, EN 60669-2-1, ETSI EN 300 328
IP degree	IP20	Working temperature	0 ÷ +50 °C
Stocking temperature	-20 ÷ +80 °C	Relative humidity (non-condensative)	10 ÷ 95%
Dimensions (mm)	Ø 60x37	Electrocod	051A

DIMENSIONAL

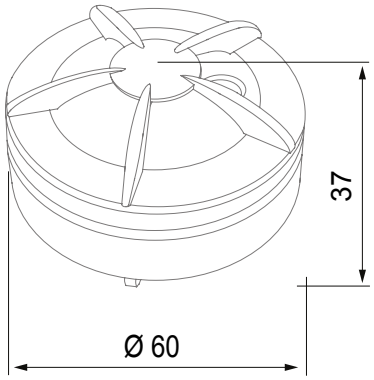

TECHNICAL SYMBOLOGY

IP

IP20

STANDARDS/APPROVALS

GEWISS S.p.A. Via A. Volta, 1
24069 Cenate Sotto - Bergamo - Italy
tel. +39 035 94 61 11 fax +39 035 94 69 09
Company subject to the management and coordination of Polifin S.p.A.

www.gewiss.com
sat@gewiss.com
Last update 28/11/2026

Data, measures, designs and pictures are shown only as informative purposes, and could be changed without previous notice