Product Data Sheet
GW68005N
68 Q-DIN Range



A complete system of IP65 boards for distributing energy in tertiary, commercial sector and building applications, available both empty and pre-wired, in accordance with the international standard EN 61439-3 and EN 61439-4.. The distribution boards allow to house flush-mounting and interloked socket-outlets up to 63A and versions are available with 5, 10, 14 or 20 DIN modules and addictional modules 14 and 20 DIN modules in order to increase modular space inside the boards.. The switches can always be inspected thanks to the wide transparent door with ergonomic handle and "hinged" screws of the front of board facilitate the wiring and maintenance.. Q-DIN are ideally for fixed applications: surface-mounting or pole-mounting , and transportable application: by handle and carrier.. To ensure the best possible performance even in outdoor environments, prolonged exposure to the sun and bad weather, the boards are also UV resistant certified in compilance with EN62208.

Colour	Grey RAL 7035	IP degree	IP65
No. of modules EN 50022	14	Houseable socket	3 IEC 309 16/32 A IP44/67
Installation type	Surface-mounting	Dispersible power A (W)	24
Dispersible power B (W)	64	Accordance with Standards	EN 62208
Glow Wire Test	650 °C	Mechanical resistance	IK08
Operating temperature	-25 +40 °C	Thermo-pressure with ball	70 °C
Insulation class	II	Version	Empty

BEHAVIOUR WITH CHEMICAL AND ATMOSPHERIC AGENTS

Saline solution	Acids		Bases		Solvents				Mineral oil	UV rays
	Concentrated	Diluited	Concentrated	Diluited	Hexane	Benzol	Acetone	Alcohol		
Resistant	Limited resistance	Resistant	Resistant	Resistant	Limited resistance	Not resistant	Not resistant	Limited resistance	Limited resistance	Limited resistance

DIMENSIONAL

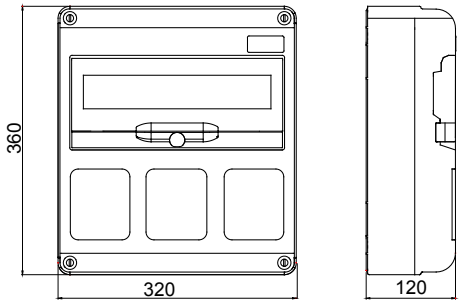

TECHNICAL SYMBOLOGY



STANDARDS/APPROVALS



GEWISS S.p.A. Via A. Volta, 1
24069 Cenate Sotto - Bergamo - Italy
tel. +39 035 94 61 11 fax +39 035 94 69 09
Company subject to the management and coordination of Polifin S.p.A.

www.gewiss.com
sat@gewiss.com
Last update 28/11/2026

Data, measures, designs and pictures are shown only as informative purposes, and could be changed without previous notice