Product Data Sheet
GW60442

IEC 309 HP range



A range of trailing and fixed plugs and socket-outlets for industrial use, complying with the dimensional and performance standards unified at International level (IEC 60309) and assimilated by the European Standards (EN 60309) and Italian Standards (CEI 23-12). Socket-outlets and plugs with a rated current of 63 and 125A are equipped with an extra pilot contact (CP) for creating an electric interlock. The range is completed with 90° fixed plugs and 10° and 90° fixed socket-outlets. Sleeves and pins are obtained from solid brass bar, type Pt. CuZn40Pb2 (Cu 58%, Zn 40%, Pb 2%); anti-loosening terminals with unlosable screws.

Colour	Red	Rated current (A)	32
IP degree	IP67	No. of poles	3P+N+E
Mechanical resistance	IK08	Reference h	6
Rated voltage	380 - 415 V	Type	90° angled surface mounting inlet
Frequency	50/60 Hz	Terminal tightening capacity	2.5-6 mm² flexible cables - 2.5-10 mm² rigid cables
Operating temperature	-25 +55 °C	Type of wiring	With screw
Electrocod	2230	Glow wire test	850 °C (active parts) - 650 °C (passive parts)
Total number of operations	> 2000	Permissible overload	42 A
Breaking capacity at 1.1 Un	40 A	Insulation resistance	> 10 MΩ
Thermo-pressure with ball	125 °C (active parts) - 80 °C (passive parts)		

BEHAVIOUR WITH CHEMICAL AND ATMOSPHERIC AGENTS

Saline solution	Acids		Bases		Solvents				Mineral oil	UV rays
	Concentrated	Diluited	Concentrated	Diluited	Hexane	Benzol	Acetone	Alcohol		
Resistant	Not resistant	Limited resistance	Limited resistance	Resistant	Resistant	Resistant	Resistant	Resistente	Resistant	Resistant

DIMENSIONAL

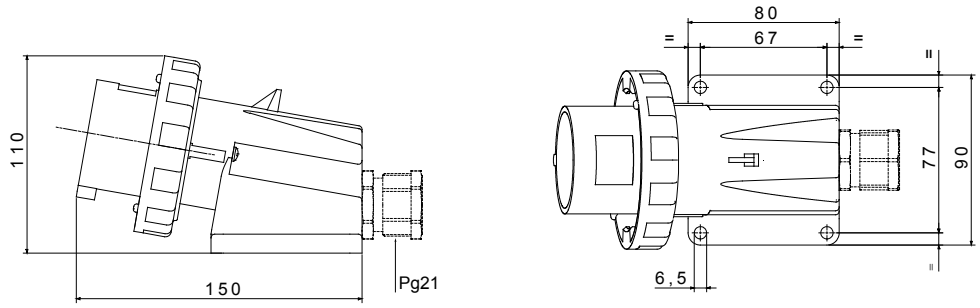

TECHNICAL SYMBOLOGY



STANDARDS/APPROVALS



GEWISS S.p.A. Via A. Volta, 1
24069 Cenate Sotto - Bergamo - Italy
tel. +39 035 94 61 11 fax +39 035 94 69 09
Company subject to the management and coordination of Polifin S.p.A.

www.gewiss.com
sat@gewiss.com
Last update 23/11/2026

Data, measures, designs and pictures are shown only as informative purposes, and could be changed without previous notice