Product Data Sheet

GW52007

GW FIT Range



Systems of accessories for electrical installations used for residential, tertiary and industrial applications. The system consists of fasteners for pipes and cables, cable fittings, accessories for rigid pipes (RK Series) and flexible conduit (DF Series). The system include also a wide variety of cable ties (52FS Range) and terminal blocks (44 Range).

Colour	Grey RAL 7035	IP degree	IP66
Material	Nylon	For cables Ø (mm)	from 13.5 to 15/from 21 to 26
PG pitch	29	Mounting hole Ø (mm)	37
Description	Cable gland	Type of pitch	PG29
Glow Wire Test	650 °C	Operating temperature	-25 +65 °C
Electrocod	36B	Standard	EN 50262 - IEC62444 - DIN 40430

BEHAVIOUR WITH CHEMICAL AND ATMOSPHERIC AGENTS

Saline solution	Acids		Bases		Solvents				Mineral oil	UV rays
	Concentrated	Diluited	Concentrated	Diluited	Hexane	Benzol	Acetone	Ethyl alcohol		
Resistant	Limited resistance	Limited resistance	Resistant	Resistant	Resistant	Resistant	Resistant	Resistant	Resistant	Limited resistance

DIMENSIONAL

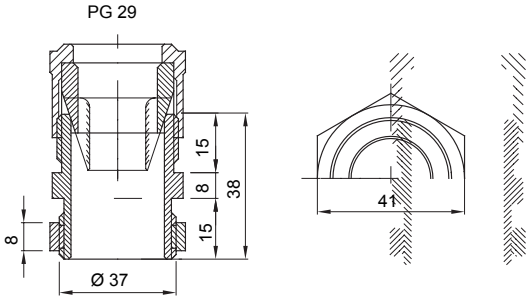

TECHNICAL SYMBOLOGY



IP66 650 °C -25 +65 °C

STANDARDS/APPROVALS



GEWISS S.p.A. Via A. Volta, 1
24069 Cenate Sotto - Bergamo - Italy
tel. +39 035 94 61 11 fax +39 035 94 69 09
Company subject to the management and coordination of Polifin S.p.A.

www.gewiss.com
sat@gewiss.com
Last update 24/11/2026

Data, measures, designs and pictures are shown only as informative purposes, and could be changed without previous notice