Product Data Sheet
GW44009
44 CE Range



Range 44 CE - Surface-mounting waterthight junction boxes in compilance with EN 60670-1 (CEI 23-48) and IEC 60670-22 (CEI 23-94) and made in high-performance technopolymers. The range includes versions with protection degree IP44, IP55, IP56 with smooth walls or with quick entry cable glands and different type of covers: blind / transparent, deep/plain, press-on/screw (in plastic, also 1/4 turn, or in metal). Available in different self-extinguishing materials (up to GWT 960 °C). Suitable for ordinary junctions, for special uses, and for industrial uses.

Insulation class	II (according to IEC 61140 standards)	Colour	Grey RAL 7035
IP degree	IP55	Material	Technopolymer GWPLAST 75
Mechanical resistance	IK08	Internal dim. LxHxD (mm)	300x220x120
Entries No. holes / Ø	12 / 48	Lid screws (no. and type)	4 insul. sealable hinged
Application	Ordinary junctions	Glow Wire Test	650 °C
Lid	Low screwed	Operating temperature	-25 +60 °C
Type of material	Halogen-free in compliance with EN 60754-2	Electrocod	02210
Thermo-pressure with ball	85 °C	Torque screws tightening	1.8 NM
Walls	With cable glands	Accessories for insulation restoring	GW44621, GW44622

BEHAVIOUR WITH CHEMICAL AND ATMOSPHERIC AGENTS

Saline solution	Acids		Bases		Solvents				Mineral oil	UV rays
	Concentrated	Diluited	Concentrated	Diluited	Hexane	Benzol	Acetone	Alcohol		
Resistant	Limited resistance	Resistant	Resistant	Resistant	Limited resistance	Not resistant	Not resistant	Limited resistance	Limited resistance	Limited resistance

DIMENSIONAL

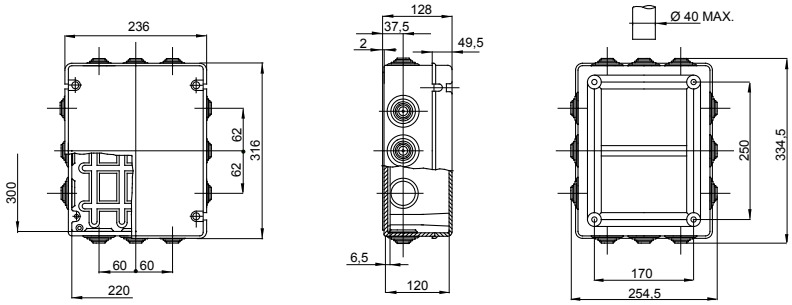

TECHNICAL SYMBOLOGY



II (according to IEC 61140 standards)

IP
IP55

IK
IK08

GWT
650 °C

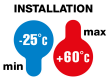

-25 +60 °C



Halogen-free in compliance with EN 60754-2


85 °C

STANDARDS/APPROVALS



GEWISS S.p.A. Via A. Volta, 1
24069 Cenate Sotto - Bergamo - Italy
tel. +39 035 94 61 11 fax +39 035 94 69 09
Company subject to the management and coordination of Polifin S.p.A.

www.gewiss.com
sat@gewiss.com
Last update 28/11/2026

Data, measures, designs and pictures are shown only as informative purposes, and could be changed without previous notice