Product Data Sheet
GW22462

SYSTEM - Domestic range



Watertight plates IP55 System range for rectangular (3 and 4 modules) flush mounting boxes. Watertight plates self-supporting for the installation of System range devices. Ergonomic membrane, opening facilitated by a comfortable handle. IP55 degree guaranteed with closed lid and watertight plate mounted on smooth and waterproof walls, without grooves.

Description	4 modules	Colour Plate	Black
Finishing	Glossy	Material	Technopolymer
IP degree	IP55 (with closed lid)	Lid	With membrane
Membrane color	Transparent	For flush mounting box	Rectangular 4 modules
Fixing	2 screws (included)	Type of screw	6/32 x 18 mm
Screw material	Galvanised steel	Included support	Self-supporting
Gasket	Vulcanized expanded rubber	Glow Wire Test	650 °C
Thermo-pressure with ball	70 °C	Standard	EN 60669-1
Operating temperature	-25 +60 °C	UV resistance	Yes (ISO 4892-2)
Maximum opening angle lid	100°	Electrocod	0110

BEHAVIOUR WITH CHEMICAL AND ATMOSPHERIC AGENTS

Saline solution	Acids		Bases		Solvents				Mineral oil	UV rays
	Concentrated	Diluited	Concentrated	Diluited	Hexane	Benzol	Acetone	Alcohol		
Resistant	Limited resistance	Resistant	Resistant	Resistant	Limited resistance	Not resistant	Not resistant	Not resistant	Limited resistance	Resistant

DIMENSIONAL

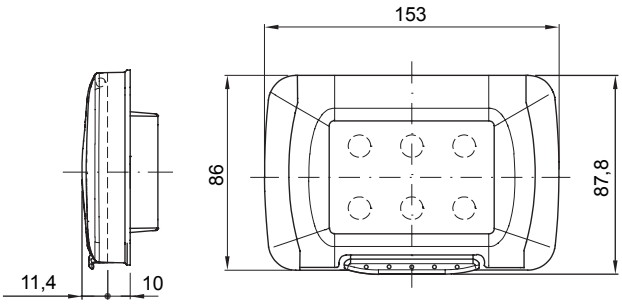

TECHNICAL SYMBOLOGY



IP55 (with closed lid) 650 °C 70 °C -25 +60 °C

STANDARDS/APPROVALS

GEWISS S.p.A. Via A. Volta, 1
24069 Cenate Sotto - Bergamo - Italy
tel. +39 035 94 61 11 fax +39 035 94 69 09
Company subject to the management and coordination of Polifin S.p.A.

www.gewiss.com
sat@gewiss.com
Last update 25/11/2026

Data, measures, designs and pictures are shown only as informative purposes, and could be changed without previous notice