Product Data Sheet

GW16122TI

CHORUSMART - Domestic range



Range of ChoruSmart domestic series plates, made in a wide variety of shapes, colours, materials and finishes. It includes five different shapes (ONE, GEO, EGO, LUX, ICE and ICE Touch) for rectangular boxes with a capacity of up to 12 modules and three different shapes (ONE International, GEO International and LUX International) suitable for round/square boxes, both single and combined in horizontal or vertical configurations, with a capacity of 2 up to 2+2+2+2 modules. All ChoruSmart domestic series plates use the same supports, without the need for additional adapters. The range also includes blank plates, watertight IP55 plates and contour plates.

Family	ONE International	Description	2 modules
Colour	Ivory	Material	Technopolymer
Finishing	Glossy	For support codes	GW16821, GW16822, GW16823
For box	Round/Square	Glow wire test	650 °C
Thermo-pressure with ball	70 °C	Standard	EN 60669-1
Electrocod	0110		

DIMENSIONAL

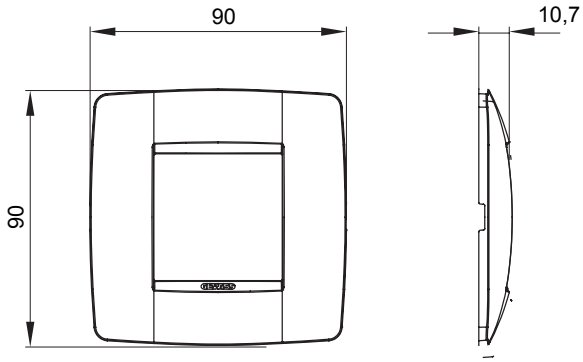

TECHNICAL SYMBOLOGY



STANDARDS/APPROVALS

GEWISS S.p.A. Via A. Volta, 1
24069 Cenate Sotto - Bergamo - Italy
tel. +39 035 94 61 11 fax +39 035 94 69 09
Company subject to the management and coordination of Polifin S.p.A.

www.gewiss.com
sat@gewiss.com
Last update 24/11/2026

Data, measures, designs and pictures are shown only as informative purposes, and could be changed without previous notice