Product Data Sheet
GW16108VW

CHORUSMART - Domestic range

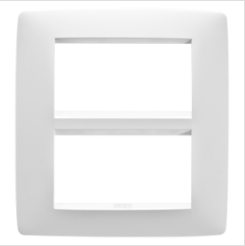

Range of ChoruSmart domestic series plates, made in a wide variety of shapes, colours, materials and finishes. It includes five different shapes (ONE, GEO, EGO, LUX, ICE and ICE Touch) for rectangular boxes with a capacity of up to 12 modules and three different shapes (ONE International, GEO International and LUX International) suitable for round/square boxes, both single and combined in horizontal or vertical configurations, with a capacity of 2 up to 2+2+2+2 modules. All ChoruSmart domestic series plates use the same supports, without the need for additional adapters. The range also includes blank plates, watertight IP55 plates and contour plates.

Family	ONE	Description	4+4 modules
Colour	White	Material	Technopolymer
Finishing	Opaque finish	For support codes	GW16808
Glow wire test	650 °C	Thermo-pressure with ball	70 °C
Standard	EN 60669-1	Electrocod	0110

DIMENSIONAL

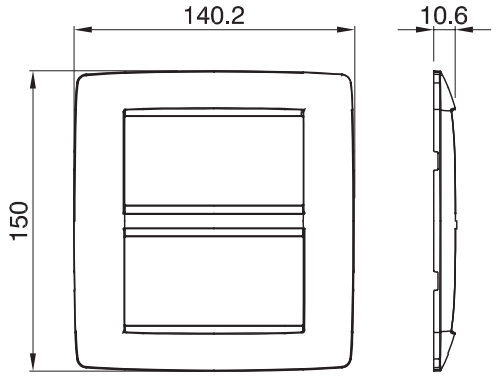

TECHNICAL SYMBOLOGY



STANDARDS/APPROVALS

GEWISS S.p.A. Via A. Volta, 1
24069 Cenate Sotto - Bergamo - Italy
tel. +39 035 94 61 11 fax +39 035 94 69 09
Company subject to the management and coordination of Polifin S.p.A.

www.gewiss.com
sat@gewiss.com
Last update 24/11/2026

Data, measures, designs and pictures are shown only as informative purposes, and could be changed without previous notice