Product Data Sheet

GW14544

CHORUSMART - Domestic range



Wide range of control devices, sockets for power supply (conforming to national and international standards) signal pick-up, climate control, comfort management, technical alarm signalling and emergency lighting management. The ChoruSmart modular devices are available in five colours, glossy white, satin white, natural beige, satin black and lacquered titanium and in various sizes from 1/2, 1, 2 and 3 modules. Thanks to the mounting supports for rectangular, square and round boxes, endless combinations can be created with the ChoruSmart range of plates.

Category	Replaceable button key	Type	Interchangeable
Colour	Glossy Titanium	Description	Keys 22x22 mm
Standard	EN 60669-1	Thermo-pressure with ball	125 °C
Glow Wire Test	850 °C	Symbol	Bell
Material	Technopolymer	Electrocod	0130

DIMENSIONAL

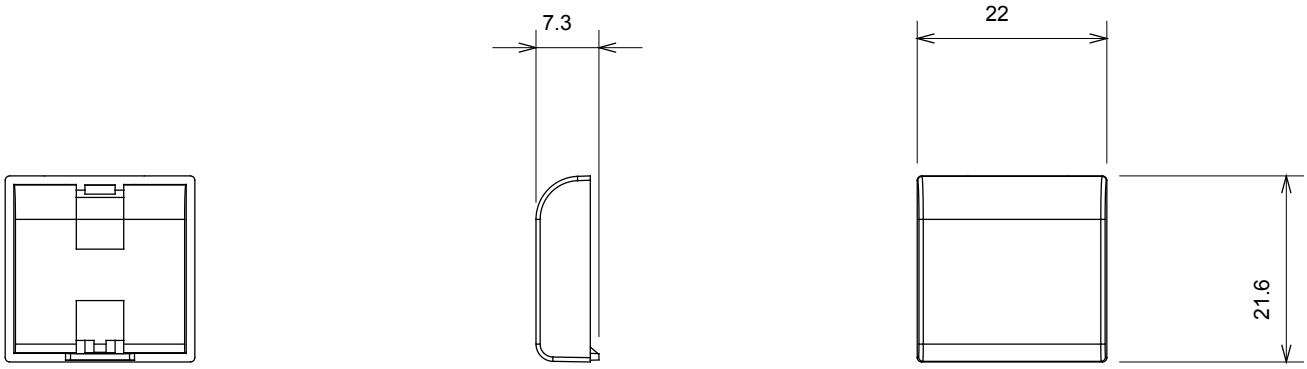

TECHNICAL SYMBOLOGY



STANDARDS/APPROVALS

GEWISS S.p.A. Via A. Volta, 1
24069 Cenate Sotto - Bergamo - Italy
tel. +39 035 94 61 11 fax +39 035 94 69 09
Company subject to the management and coordination of Polifin S.p.A.

www.gewiss.com
sat@gewiss.com
Last update 29/11/2026

Data, measures, designs and pictures are shown only as informative purposes, and could be changed without previous notice