Product Data Sheet
GW14331

CHORUSMART - Domestic range



Wide range of control devices, sockets for power supply (conforming to national and international standards) signal pick-up, climate control, comfort management, technical alarm signalling and emergency lighting management. The ChoruSmart modular devices are available in five colours, glossy white, satin white, natural beige, satin black and lacquered titanium and in various sizes from 1/2, 1, 2 and 3 modules. Thanks to the mounting supports for rectangular, square and round boxes, endless combinations can be created with the ChoruSmart range of plates.

Category	Shaver socket-outlet	Description	With isolation transformer
Colour	Glossy Titanium	Standard	Euro-American
For plug pins	Ø 4 / 5 - 6.3x1.5 mm	Wiring terminals	With screw
Socket-out type	P11-USA	Standard	IEC 60884-1; EN 61558-2-5
Selectable output voltage	120-230 V ac	Resistance at test voltage	2000 V at 50 Hz for 1 minute
Maximum power	20 VA	Insulation resistance	> 5 MOhm
Supply voltage	230 V ac - 50/60 Hz	Thermo-pressure with ball	125 °C
Terminal grip on cable traction	> 50 N	Terminal tightening capacity stranded cables (mm²)	min. 0.75 - max. 2x4
Terminal tightening capacity solid cables (mm²)	min. 0.5 - max. 2x2.5	No. modules	3
Electrocod	0131	Material	Technopolymer

DIMENSIONAL

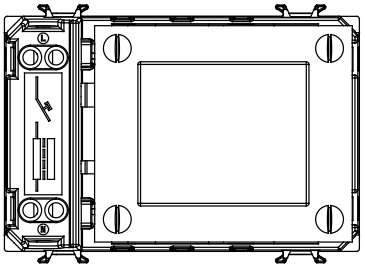

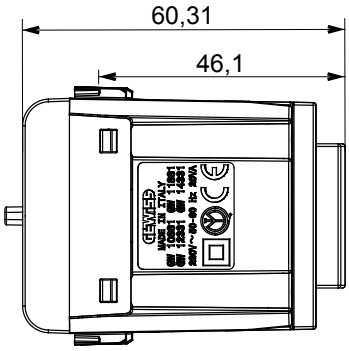

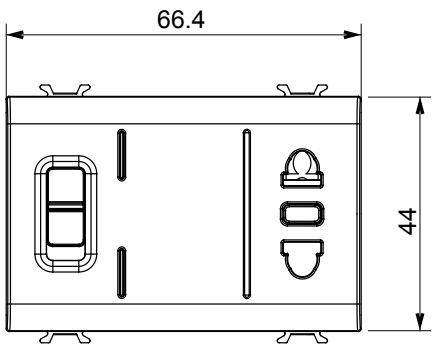

TECHNICAL SYMBOLOGY



STANDARDS/APPROVALS

CE Reach Declaration

GEWISS S.p.A. Via A. Volta, 1
24069 Cenate Sotto - Bergamo - Italy
tel. +39 035 94 61 11 fax +39 035 94 69 09
Company subject to the management and coordination of Polifin S.p.A.

www.gewiss.com
sat@gewiss.com
Last update 21/10/2026

Data, measures, designs and pictures are shown only as informative purposes, and could be changed without previous notice