Product Data Sheet
GW14191

CHORUSMART - Domestic range



Wide range of control devices, sockets for power supply (conforming to national and international standards) signal pick-up, climate control, comfort management, technical alarm signalling and emergency lighting management. The ChoruSmart modular devices are available in five colours, glossy white, satin white, natural beige, satin black and lacquered titanium and in various sizes from 1/2, 1, 2 and 3 modules. Thanks to the mounting supports for rectangular, square and round boxes, endless combinations can be created with the ChoruSmart range of plates.

Category	Push-button	Type	Name plate
Colour	Glossy Titanium	Description	1P NO - 10 A
Voltage	250 V ac	Standard	EN 60669-1
Resistance at test voltage	2000 V at 50 Hz for 1 minute	Insulation resistance	> 5 MOhm
Wiring terminals	With screw	Prolonged operation switch (no.of position changes)	40.000 at In 250 V ac cosφ=0.6
Lamp	Cartridge lamp S6x36 mm (not included)	Thermo-pressure with ball	125 °C
Glow Wire Test	850 °C	Lamp voltage	12-24 V ac/dc
Terminal grip on cable traction	> 50 N	Lamp power	2 W
Terminal tightening capacity stranded cables (mm²)	min. 0.75 - max. 2x4	Terminal tightening capacity solid cables (mm²)	min. 0.5 - max. 2x2.5
No. modules	2	Material	Technopolymer
Electrocod	0130		

DIMENSIONAL

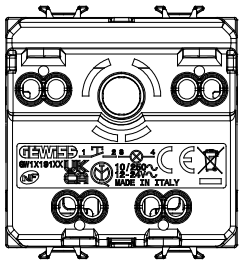

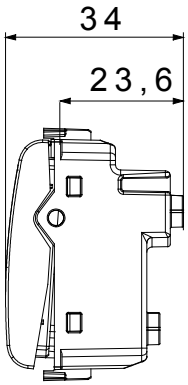

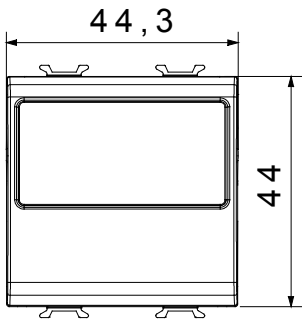

TECHNICAL SYMBOLOGY

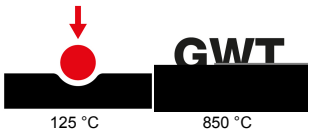

STANDARDS/APPROVALS

GEWISS S.p.A. Via A. Volta, 1
24069 Cenate Sotto - Bergamo - Italy
tel. +39 035 94 61 11 fax +39 035 94 69 09
Company subject to the management and coordination of Polifin S.p.A.

www.gewiss.com
sat@gewiss.com
Last update 27/11/2026

Data, measures, designs and pictures are shown only as informative purposes, and could be changed without previous notice