Product Data Sheet

GW14160F

CHORUSMART - Domestic range



Wide range of control devices, sockets for power supply (conforming to national and international standards) signal pick-up, climate control, comfort management, technical alarm signalling and emergency lighting management. The ChoruSmart modular devices are available in five colours, glossy white, satin white, natural beige, satin black and lacquered titanium and in various sizes from 1/2, 1, 2 and 3 modules. Thanks to the mounting supports for rectangular, square and round boxes, endless combinations can be created with the ChoruSmart range of plates.

Category	Double push-button	Button key	Neutral
Symbol	UP - DOWN - STOP	Colour	Glossy Titanium
Description	Twin push-button 1P NO - 16 A	Voltage	250 V ac
Standard	EN 60669-1	Resistance at test voltage	2000 V at 50 Hz for 1 minute
Insulation resistance	> 5 MOhm	Wiring terminals	Quick, with spring
Prolonged operation switch (no.of position changes)	40.000 at In 250 V ac cosφ=0.6	Thermo-pressure with ball	125 °C
Glow Wire Test	850 °C	Terminal grip on cable traction	> 50 N
Terminal tightening capacity stranded cables (mm²)	min. 0.75 - max. 2x2.5	Terminal tightening capacity solid cables (mm²)	min. 0.5 - max. 2x2.5
No. modules	2	Material	Technopolymer
Electrocod	0130		

DIMENSIONAL

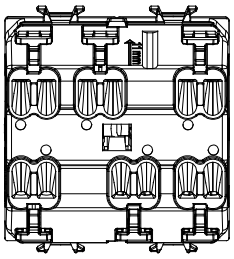

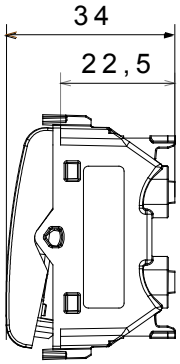

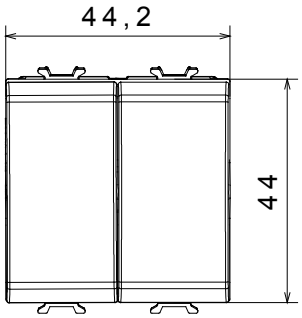

TECHNICAL SYMBOLOGY



GWT

125 °C 850 °C

STANDARDS/APPROVALS

GEWISS S.p.A. Via A. Volta, 1
24069 Cenate Sotto - Bergamo - Italy
tel. +39 035 94 61 11 fax +39 035 94 69 09
Company subject to the management and coordination of Polifin S.p.A.

www.gewiss.com
sat@gewiss.com
Last update 23/11/2026

Data, measures, designs and pictures are shown only as informative purposes, and could be changed without previous notice