Product Data Sheet
GW12382

CHORUSMART - Domestic range



Wide range of control devices, sockets for power supply (conforming to national and international standards) signal pick-up, climate control, comfort management, technical alarm signalling and emergency lighting management. The ChoruSmart modular devices are available in five colours, glossy white, satin white, natural beige, satin black and lacquered titanium and in various sizes from 1/2, 1, 2 and 3 modules. Thanks to the mounting supports for rectangular, square and round boxes, endless combinations can be created with the ChoruSmart range of plates.

Category	TV/FM/SAT socket-outlet	Description	Direct
Colour	Satin black	Attenuation	0 dB
Connectors	TV-FM-SAT	Standard	EN 60728-4; IEC 61169-2; IEC 61169-24
No. modules	2	Cable fixing	With screw
Case	Pressure casting zamak metal body	Electrocod	0131
Material	Technopolymer		

DIMENSIONAL

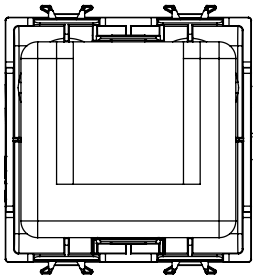

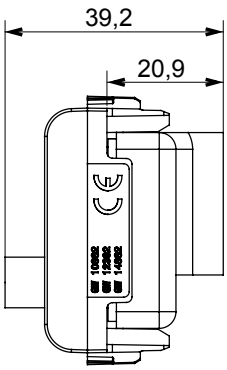

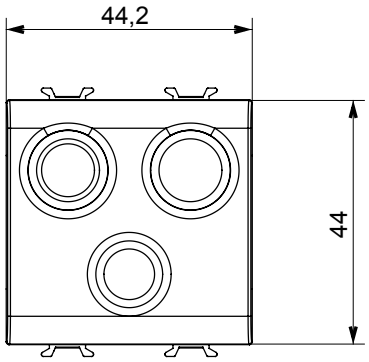

STANDARDS/APPROVALS

GEWISS S.p.A. Via A. Volta, 1
24069 Cenate Sotto - Bergamo - Italy
tel. +39 035 94 61 11 fax +39 035 94 69 09
Company subject to the management and coordination of Polifin S.p.A.

www.gewiss.com
sat@gewiss.com
Last update 26/11/2026

Data, measures, designs and pictures are shown only as informative purposes, and could be changed without previous notice