Product Data Sheet
GW12310

CHORUSMART - Domestic range



The GW10310, GW12310, GW14310 multi-standard sockets meet the safety requirements of the international standard IEC 60884-1. The sockets of this type, regardless of the manufacturer, are not covered by the Italian CEI Standard 23-50. Their installation within the national territory may therefore be subject to limitations. The permissible plugs are listed below: •Standard Europlug 2,5A 2P (250V) • Chinese Standard 10A 2P+T (250V) • Standard Argentine/Australian 10A 2P+T (250V) • Standard English 13A 2P+T (250V) • Standard English 10A 2P (250V) • Standard USA 15A 2P+T (127V) • Standard Indian 6A 2P+T (250V) • Standard Danish 10A 2P (250V). CAUTION: Not suitable for German and French 2P+T plugs as they do not offer earth continuity.

Category	Socket-outlet	Description	2P+E - 13 A/250 V ac - 15 A/127 V ac
Colour	Satin black	Voltage	250/127 V ac
Standard	Multistandard	Characteristics	With safety shutters
Wiring terminals	With screw	Standard	IEC 60884-1
Resistance at test voltage	2000 V at 50 Hz for 1 minute	Insulation resistance	> 5 MOhm
Thermo-pressure with ball	125 °C	Glow Wire Test	850 °C
Terminal grip on cable traction	> 50 N	Terminal tightening capacity stranded cables (mm²)	min. 1.5 - max. 2x2.5
Terminal tightening capacity solid cables (mm²)	min. 1.5 - max. 2x2.5	No. modules	2
Electrocod	0131	Material	Technopolymer

DIMENSIONAL

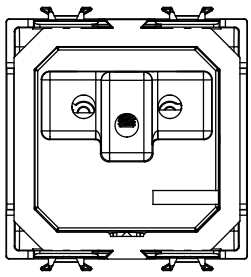

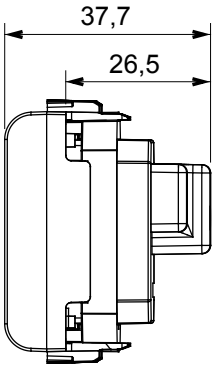

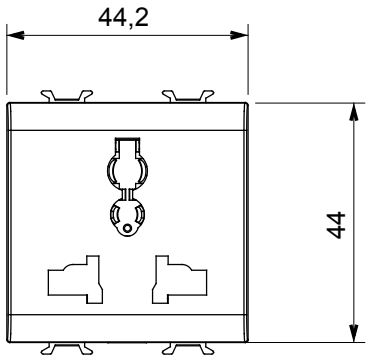

TECHNICAL SYMBOLOGY



STANDARDS/APPROVALS

CE Reach Declaration

GEWISS S.p.A. Via A. Volta, 1
24069 Cenate Sotto - Bergamo - Italy
tel. +39 035 94 61 11 fax +39 035 94 69 09
Company subject to the management and coordination of Polifin S.p.A.

www.gewiss.com
sat@gewiss.com
Last update 25/11/2026

Data, measures, designs and pictures are shown only as informative purposes, and could be changed without previous notice