Product Data Sheet
GW12242

CHORUSMART - Domestic range



Wide range of control devices, sockets for power supply (conforming to national and international standards) signal pick-up, climate control, comfort management, technical alarm signalling and emergency lighting management. The ChoruSmart modular devices are available in five colours, glossy white, satin white, natural beige, satin black and lacquered titanium and in various sizes from 1/2, 1, 2 and 3 modules. Thanks to the mounting supports for rectangular, square and round boxes, endless combinations can be created with the ChoruSmart range of plates.

Category	Socket-outlet	Description	2P+E - 16 A
Colour	Satin black	Voltage	250 V ac
Standard	German	Characteristics	With safety shutters
For plug pins	Ø 4.8 mm	Wiring terminals	With screw
Standard	IEC 60884-1; DIN VDE 0620-1	Resistance at test voltage	2000 V at 50 Hz for 1 minute
Insulation resistance	> 5 MOhm	Prolonged operation socket (no.of position changes)	10.000 at In 250 V ac cosφ=0.8
Thermo-pressure with ball	125 °C	Glow Wire Test	850 °C
Terminal grip on cable traction	> 50 N	Terminal tightening capacity stranded cables (mm²)	min. 0.75 - max. 2x4
IP degree	IP40	Terminal tightening capacity solid cables (mm²)	min. 0.5 - max. 2x2.5
No. modules	2	Electrocod	0131
Material	Technopolymer		

DIMENSIONAL

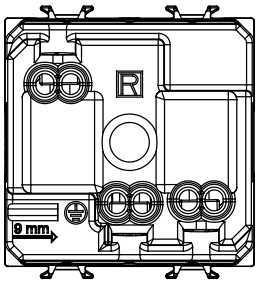

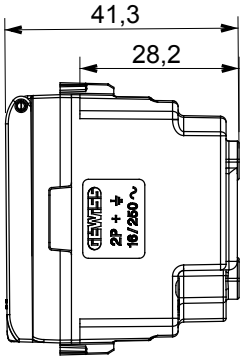

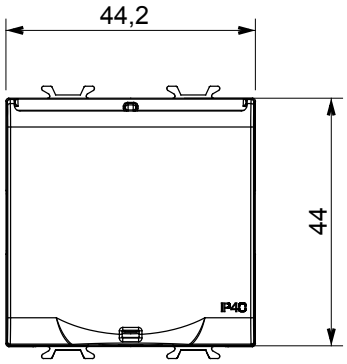

TECHNICAL SYMBOLOGY



GWT

IP

125 °C | 850 °C | IP40

STANDARDS/APPROVALS

GEWISS S.p.A. Via A. Volta, 1
24069 Cenate Sotto - Bergamo - Italy
tel. +39 035 94 61 11 fax +39 035 94 69 09
Company subject to the management and coordination of Polifin S.p.A.

www.gewiss.com
sat@gewiss.com
Last update 26/11/2026

Data, measures, designs and pictures are shown only as informative purposes, and could be changed without previous notice