Product Data Sheet
GW10251AB

CHORUSMART - Domestic range

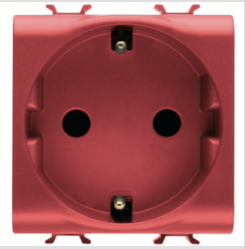

A range of ChoruSmart modular devices and plates made of antibacterial technopolymer in a glossy white finish, suitable for use in hospitals, nursing homes, schools and wherever cleanness and hygiene are essential. The effective silver-ion antibacterial treatment can reduce bacterial growth by 99% within 24 hours and has been verified by certified laboratory testing in accordance with standard ISO 22196 (analysis of major strains of Staphylococcus aureus and E. coli bacterial species).

Category	Socket-outlet	Description	2P+E - 16 A
Colour	Red	Type	for dedicated lines
Voltage	250 V ac	Standard	German
Characteristics	With safety shutters	For plug pins	Ø 4.8 mm
Wiring terminals	With screw	Standard	IEC 60884-1; DIN VDE 0620-1
Resistance at test voltage	2000 V at 50 Hz for 1 minute	Insulation resistance	> 5 MOhm
Prolonged operation socket (no.of position changes)	10.000 at In 250 V ac cosφ=0.8	Thermo-pressure with ball	125 °C
Glow Wire Test	850 °C	Terminal grip on cable traction	> 50 N
Terminal tightening capacity stranded cables (mm²)	min. 0.75 - max. 2x4	Terminal tightening capacity solid cables (mm²)	min. 0.5 - max. 2x2.5
No. modules	2	Electrocod	0131
Material	Antibacterial tecnopolymer		

DIMENSIONAL

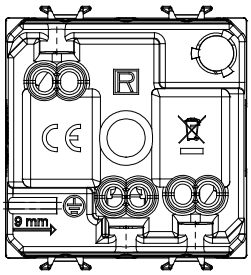

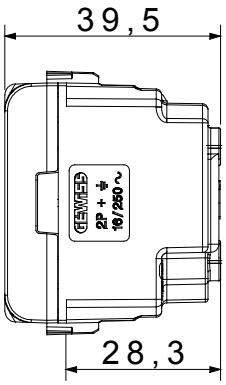

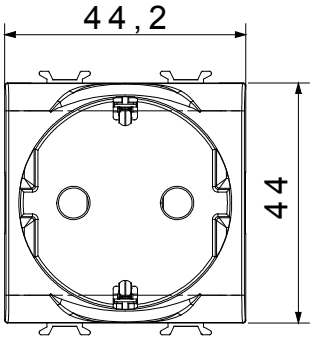

TECHNICAL SYMBOLOGY



STANDARDS/APPROVALS

GEWISS S.p.A. Via A. Volta, 1
24069 Cenate Sotto - Bergamo - Italy
tel. +39 035 94 61 11 fax +39 035 94 69 09
Company subject to the management and coordination of Polifin S.p.A.

www.gewiss.com
sat@gewiss.com
Last update 25/11/2026

Data, measures, designs and pictures are shown only as informative purposes, and could be changed without previous notice