Product Data Sheet

DX52120

FK Range



-

Colour	Grey RAL 7035	Material	PP
Conduits Ø (mm)	20	Electrocod	210

DIMENSIONAL

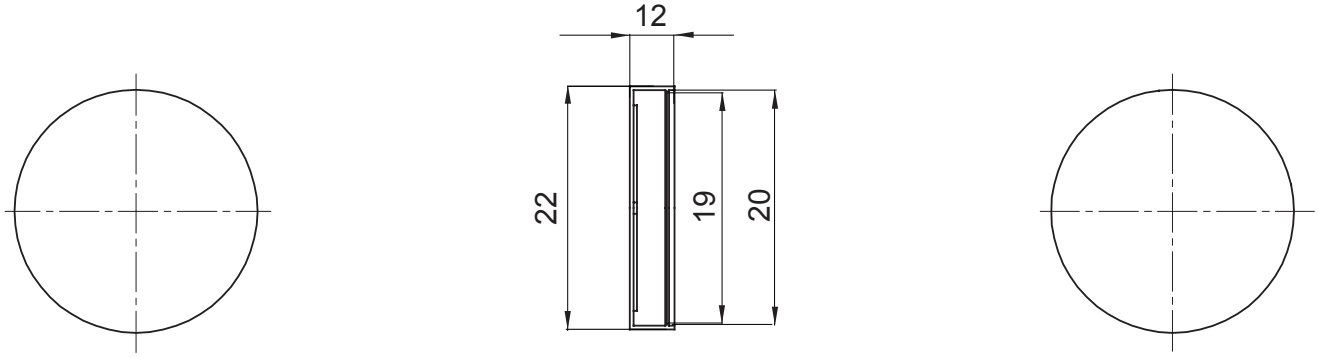

STANDARDS/APPROVALS

GEWISS S.p.A. Via A. Volta, 1
24069 Cenate Sotto - Bergamo - Italy
tel. +39 035 94 61 11 fax +39 035 94 69 09
Company subject to the management and coordination of Polifin S.p.A.

www.gewiss.com
sat@gewiss.com
Last update 27/11/2026

Data, measures, designs and pictures are shown only as informative purposes, and could be changed without previous notice