Product Data Sheet
DX43420
RK Range



Routing components for rigid protective conduits with IP40 and IP67 protection degree.

Colour	Grey RAL 7035	IP degree	IP65
Conduits Ø (mm)	20	Sheath Ø (mm)	20
Type of material	Halogen free in compliance with EN 50642	Electrocod	21221

DIMENSIONAL

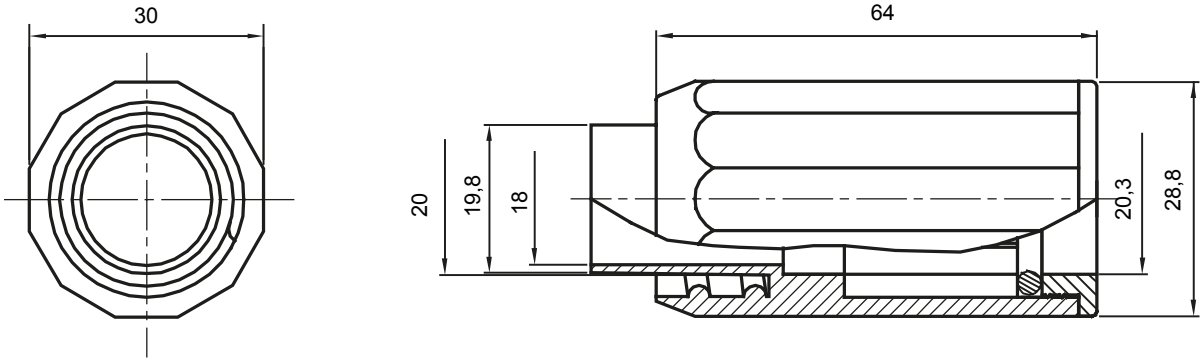

TECHNICAL SYMBOLOGY

IP

HF
EN IEC 63355:2022

IP65

STANDARDS/APPROVALS

CE

Reach Declaration

GEWISS S.p.A. Via A. Volta, 1
24069 Cenate Sotto - Bergamo - Italy
tel. +39 035 94 61 11 fax +39 035 94 69 09
Company subject to the management and coordination of Polifin S.p.A.

www.gewiss.com
sat@gewiss.com
Last update 27/11/2026

Data, measures, designs and pictures are shown only as informative purposes, and could be changed without previous notice