Product Data Sheet

DX43240

GW FIT Range



Routing components for rigid protective conduits with IP40 and IP67 protection degree.

Colour	Grey RAL 7035	IP degree	IP67
ISO pitch	M 40x1.5	For holes Ø (mm)	40
Conduits Ø (mm)	40	Type of material	Halogen free in compliance with EN 50642
Electrocod	21221		

DIMENSIONAL

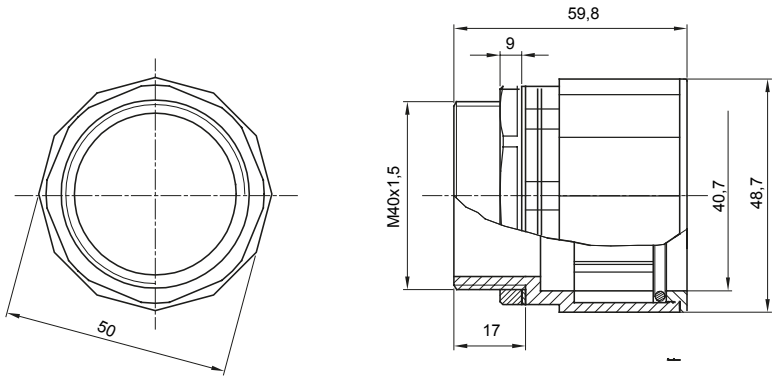

TECHNICAL SYMBOLOGY

IP

HF
EN IEC 63355:2022

IP67

STANDARDS/APPROVALS

GEWISS S.p.A. Via A. Volta, 1
24069 Cenate Sotto - Bergamo - Italy
tel. +39 035 94 61 11 fax +39 035 94 69 09
Company subject to the management and coordination of Polifin S.p.A.

www.gewiss.com
sat@gewiss.com
Last update 25/11/2026

Data, measures, designs and pictures are shown only as informative purposes, and could be changed without previous notice