Product Data Sheet

DX40216

GW FIT Range



Routing components for rigid protective conduits with IP40 and IP67 protection degree.

GENERAL INFORMATION	-	MECHANICAL AND FUNCTIONAL CHARACTERISTICS	-
Standard	EN 61386-1 (when applicable)	Conduits Ø (mm)	16
Type	Rigid conduit accessories	Operating temperature	-5 +60 °C
Description	Inspectable T	IP degree	IP40
Type of material	Halogen free in compliance with EN 50642	Glow Wire Test	750 °C
Colour	Grey RAL 7035		

DIMENSIONAL

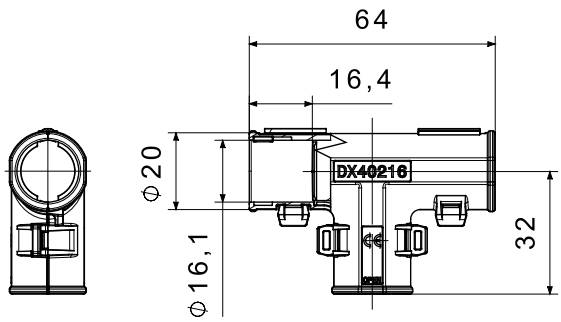

TECHNICAL SYMBOLOGY

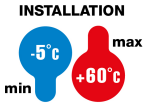

IP

IP40

HF
EN IEC 63355:2022

GWT

750 °C

STANDARDS/APPROVALS

CE

Reach Declaration

GEWISS S.p.A. Via A. Volta, 1
24069 Cenate Sotto - Bergamo - Italy
tel. +39 035 94 61 11 fax +39 035 94 69 09
Company subject to the management and coordination of Polifin S.p.A.

www.gewiss.com
sat@gewiss.com
Last update 23/11/2026

Data, measures, designs and pictures are shown only as informative purposes, and could be changed without previous notice