Product Data Sheet

DX26240

RK Range



Rigid protected conduit system range RKHF made in thermoplastic PP material, Halogen Free in compliance with EN 60754-2, classification 4422. In compliance with IEC 61386-1 (CEI 23/80) e IEC 61386-21 (CEI 23/81). The conduits are available in: 4 sizes from 16 to 32 mm for length 3 metres, 7 sizes from 16 to 63 mm for length 2 metres. Suitable for electrical systems and/or data transmission, particularly in public places (schools, cinemas, theatres). Installation type: exposed on walls and ceilings or for applications inside false ceilings and floating floors.

Colour	Grey RAL 7035	Material	PP
Length (m)	2	External Ø conduits (mm)	40
Internal Ø conduits (mm)	32.8	Halogen Free	Yes, according to EN 50642
Low smoke	Low smoke in according to EN 61034-2	Resistance to compression	4 (Heavy - 1250 N)
Resistance to impact	4 (Heavy - 6 J)	Resistance to bending	1 (Rigid)
Electrical characteristics	2 (With electrical insulating characteristics)	Protection against ingress of solid objects without accessories	0
Protection against ingress of water objects without accessories	0	Resistance against corrosion	Polypropylene naturally resistant to corrosion
Fire resistance	1 (Non-flame propagating)	Insulation resistance	100 MΩ a 500 V for 1 minute
Protection against ingress of solid objects with accessories	4/6 (It depends on the accessories used)	Protection against ingress of water with accessories	0/5/7 (It depends on the accessories used)
Dielectric rigidity	2000 V a 50 Hz for 15 minutes	Standard	EN 61386-1 EN 61386-21
Family	RKHF	Classification	4422

DIMENSIONAL

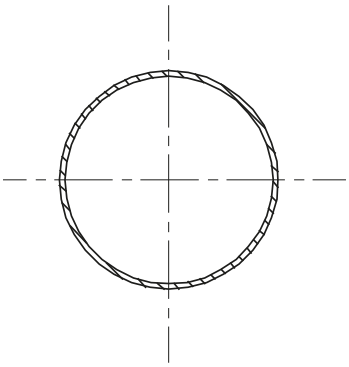

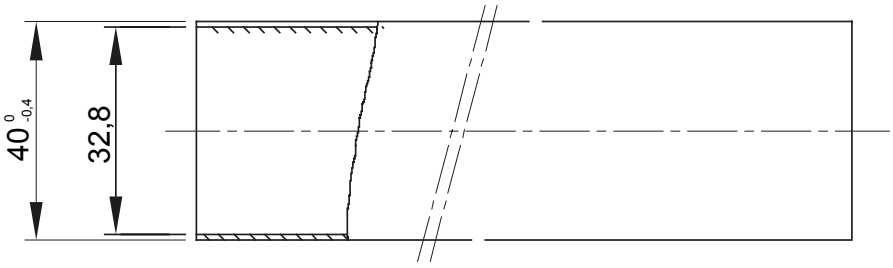

TECHNICAL SYMBOLOGY

HF EN IEC 63355:2022 · LS EN 61034-2 · 1250N · 6J · CLASSIFICATION 4422 EN 50086 EN 61386

STANDARDS/APPROVALS

CE · Reach Declaration

GEWISS S.p.A. Via A. Volta, 1
24069 Cenate Sotto - Bergamo - Italy
tel. +39 035 94 61 11 fax +39 035 94 69 09
Company subject to the management and coordination of Polifin S.p.A.

www.gewiss.com
sat@gewiss.com

Last update 25/11/2026

Data, measures, designs and pictures are shown only as informative purposes, and could be changed without previous notice